Comment	Origin	Type	Signal-/TAG-No.	Path
				1
				2
				3
				4
				5
				6
				7
				8
				9
				10
				11
				12
				13
				14
				15
				16
				17
MP GAN reservoir	Value < Min1	E	PL 73007	18
				19
				20
				21
				22
				23
MP GAN reservoir	Value > Max1	E	PH 73007	24
				25
				26
				27
MP-GAN	Value < Min1	1	PL 74090	28
				29
GAN to MP-reservoir	Value < Min1	1	PL 73002	30
				31
				32
				33
				34
				35
				36
				37
				38
				39
				40
				41
				42
				43
				44
				45
				46
				47
				48

Function

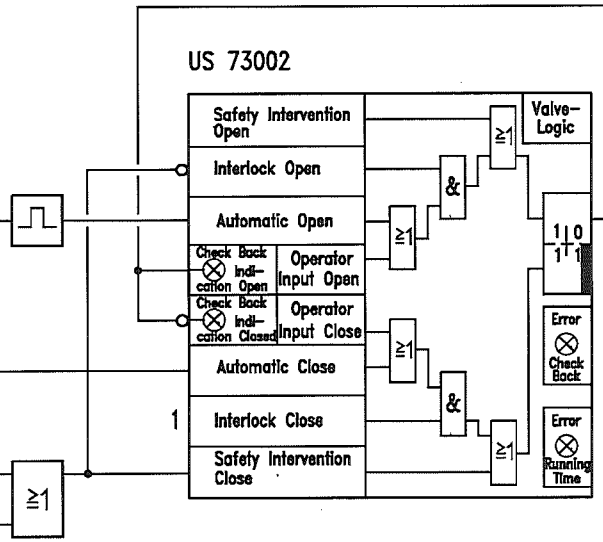

Path	Type	Signal/TAG-No.	Destination	Comment
51				
52				
53				
54				
55				
56				
57				
58				
59				
60				
61				
62				
63				
64				
65				
66				
67				
68	E	UV 73002	Solenoid valve	Open valve PV73002
69				
70				
71				
72				
73				
74				
75				
76				
77				
78				
79				
80				
81				
82				
83				
84				
85				
86				
87				
88				
89				
90				
91				
92				
93				
94				
95				
96				
97				
98				

JOB NO.	FILE NO	REV.	DATE	REVISIONS	BY	CHKD.

PROJECT NAME: ASU KOSICE

PLANT PART: TANK FARM

AIR LIQUIDE

Air Liquide AGS GmbH
Fütingsweg 34
47805 Krefeld

DRAWING NAME:
MP GAN RESERVOIR B73002
PISAHL 73007
US 73002

SIZE: A3

FUNKTION DIAGRAM

DRWG. NO.:

PROJ. NO.: K70101

REPLACES: REPLACED BY: BASED:

DATE: 26.11.2004
AUTHOR: Frohn
CHECK: Eichler
STD.:

Comment	Origin	Type	Signal-/TAG-No.	Path
Pressure LIN MP tank B 73001	P-transmitter	E	PT 73005	18
MP LIN tank	Value < Max2	1	PHH 73015	42

Function

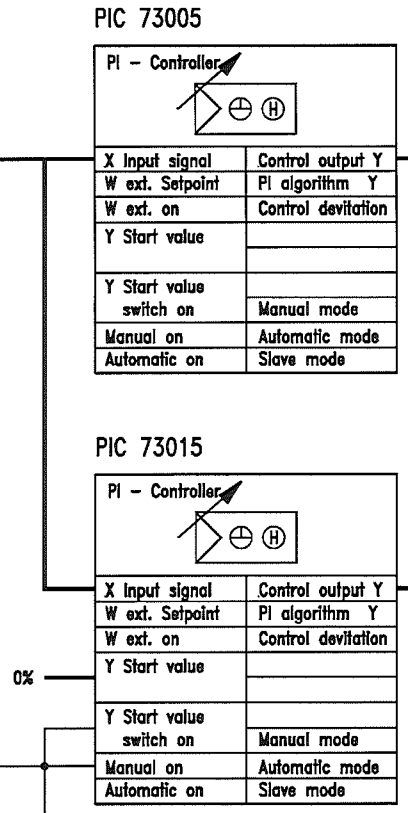

Path	Type	Signal/TAG-No.	Destination	Comment
68	E	PV 73005	Positioner 0-100% = 4-20mA	Control valve PV73005 Blow out
85	E	PV 73015	Positioner 0-100% = 4-20mA	Control valve PV73015 Pressurisation
96	1	UV 73015	Solenoid valve	Unlock PV73015

JOB NO.	FILE NO	REV.	DATE	REVISIONS	BY	CHKD.

PROJECT NAME: ASU KOSICE

PLANT PART: TANK FARM

AIR LIQUIDE

Air Liquide AGS GmbH
Fütingsweg 34
47805 Krefeld

DRAWING NAME: LIN MP TANK B73001

PRESSURE CONTROL LIN MP TANK
PIC 73005 / PIC 73015

SIZE: A3

FUNKTION DIAGRAM

DRWG. NO.:

PROJ. NO.: K70101

REPLACES: REPLACED BY: BASED:

DATE: 26.11.2004
AUTHOR: Frohn
CHECK: Eichler
STD.:

Comment	Origin	Type	Signal-/TAG-No.	Path
Level MP LIN-tank	Value > Max2	1	LHH 72007	30
Overflow MP LIN-tank	Value < Min2	1	TLL 73055	34
Pressure MP LIN-tank	Value > Max1	1	PH 73005	36
Pressure MP LIN-tank	Value > Max	1	PH 72006	38
Hardware interlock	Contact ESD-relay	0	US 73016	40

Function

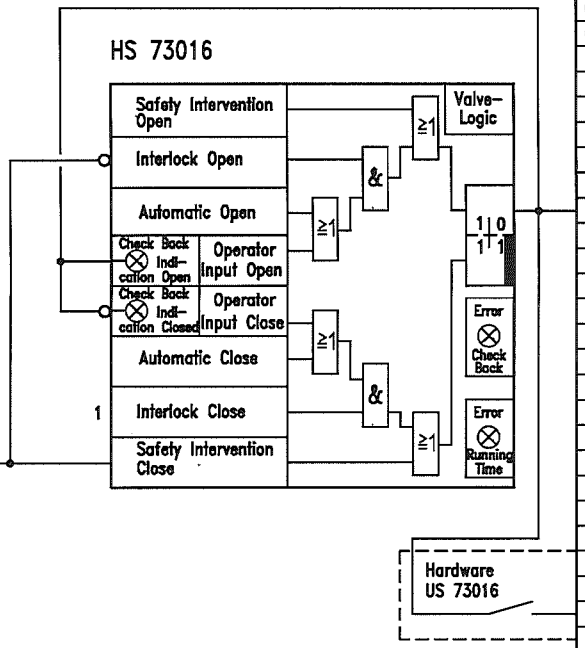

Path	Type	Signal/TAG-No.	Destination	Comment
70	1	HS 73016		
86	1	UV 73016	Solenoid Valve	Open inlet valve
87				PV 73016

JOB NO.	FILE NO	REV.	DATE	REVISIONS	BY	CHKD.

PROJECT NAME: ASU KOSICE

PLANT PART: TANK FARM

AIR LIQUIDE

Air Liquide AGS GmbH
Fütingsweg 34
47805 Krefeld

DRAWING NAME:
MP LIN TANK B73001
MP LIN TANK INLET VALVE
HS 73016

SIZE: A3

FUNKTION DIAGRAM

DRWG. NO.

PROJ. NO.: K70101

REPLACES: REPLACED BY: BASED:

DATE: 26.11.2004
AUTHOR: Frohn
CHECK: Eichler
STD.

Comment	Origin	Type	Signal-/TAG-No.	Path
				1
				2
				3
				4
				5
				6
				7
				8
				9
				10
				11
				12
				13
				14
				15
				16
				17
				18
				19
				20
				21
				22
				23
				24
				25
				26
				27
				28
				29
				30
				31
				32
				33
				34
				35
				36
				37
				38
				39
				40
				41
				42
				43
				44
				45
				46
				47
				48

Function

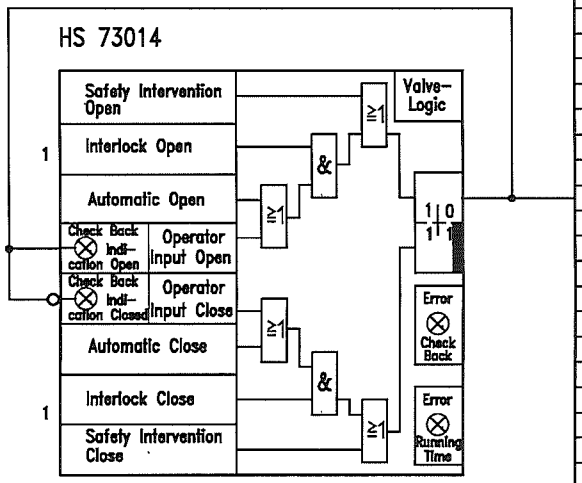

Path	Type	Signal/TAG-No.	Destination	Comment
51				
52				
53				
54				
55				
56				
57				
58				
59				
60				
61				
62				
63				
64				
65				
66				
67				
68				
69	1	UV 73014	Solenoid valve	Open valve HV73014
70				
71				
72				
73				
74				
75				
76				
77				
78				
79				
80				
81				
82				
83				
84				
85				
86				
87				
88				
89				
90				
91				
92				
93				
94				
95				
96				
97				
98				

JOB NO.	FILE NO	REV.	DATE	REVISIONS	BY	CHKD.

PROJECT NAME: ASU KOSICE

PLANT PART: TANK FARM

AIR LIQUIDE

Air Liquide AGS GmbH
Fütingsweg 34
47805 Krefeld

DRAWING NAME:
MP LIN TO EXISTING STORAGE
HS 73014

SIZE: A3

FUNKTION DIAGRAM

DRWG. NO.:

PROJ. NO.: K70101

REPLACES: REPLACED BY:

DATE: 26.11.2004
AUTHOR: Frohn
CHECK: Eichler
STD.:

BASED:

Rang.	Comment	Origin	Type	Signal-/TAG-No.	Path
					1
					2
					3
					4
					5
					6
					7
					8
					9
	Reset trip LIN-pump	Software reset button	1	HS 73101_Res	10
	P73101				11
					12
					13
					14
					15
					16
	GAN temp. trip	Value < Min2	1	TLL 73051	17
					18
					19
	GAN temp. trip	Value < Min2	1	TLL 73057	20
					21
					22
	Fail LIN pump	from page no.121/88	1	HS 73101_fail	23
					24
	Bearing temp.	Value < Min2	1	TLL 73140	25
	Motor bearing	Value < Min2	1	TLL 73141	26
	Bearing temp.	Value > Max2	1	THH 73140	27
	Motor bearing	Value > Max2	1	THH 73141	28
	Electric fail	Contact	0	EL 73101	29
	frequency converter				30
					31
	Emergency shut down	Contact ESD-relay	0	HZ 72009	32
					33
	Press. outlet pump	Value > Max2	1	PHH 73150	34
					35
					36
	Level vaporizer	Level switch < Min	0	LL 73030	37
					38
	Water bath vaporizer	Value < Min	1	TL 73031	39
	Water bath vaporizer	Value < Min	1	TL 73032	40
					41
	GAN beh. vaporizer	Value > Max2	1	PHH 73050	42
					43
	Level LP-tank	Value < Min2	1	LLL 73005	44
	B72001				45
	Pressure LP-tank	Value < Min1	1	PL 73005	46
	B72001				47
					48

Function

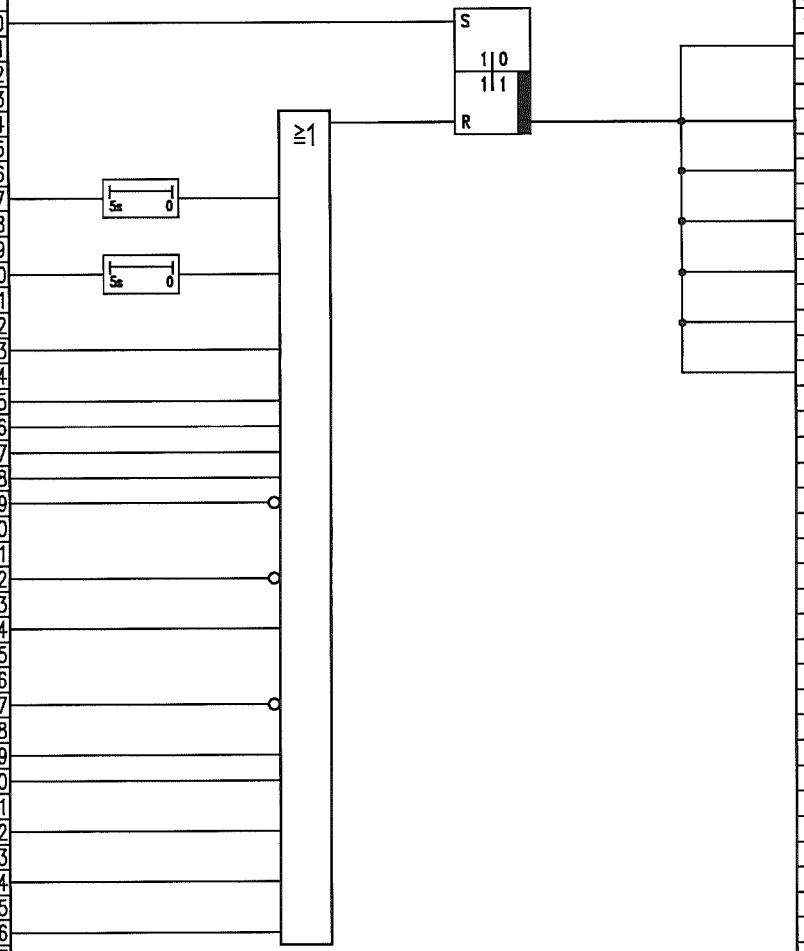

Path	Type	Signal/TAG-No.	Destination	Comment	Rang.
51					
52					
53					
54					
55					
56					
57					
58					
59					
60					
61	1	UA 73101	Alarm OS	"Trip LIN-pump P73101"	
62					
63					
64	1	US 73101	to page no. 106/16	Trip P73101	
65					
66	1	US 73101	to page no. 117/17		
67					
68	1	US 73101	to page no. 118/39		
69					
70	1	US 73101	to page no. 121/40		
71					
72	1	US 73101	to page no 124/27		
73					
74	1	US 73101	to page no. 125/17		
75					
76					
77					
78					
79					
80					
81					
82					
83					
84					
85					
86					
87					
88					
89					
90					
91					
92					
93					
94					
95					
96					
97					
98					

JOB NO.	FILE NO.	REV.	DATE	REVISIONS	BY	CHKD.

PROJECT NAME: ASU KOSICE

PLANT PART: TANK FARM

AIR LIQUIDE

Air Liquide AGS GmbH
Fütingsweg 34
47805 Krefeld

DRAWING NAME: TANK STORAGE, LIN PUMP P73101 TRIP US 73101

SIZE: A3

FUNKTION DIAGRAM

DRWG. NO.:

PROJ. NO.: K70101

REPLACES: REPLACED BY: BASED:

DATE: 26.11.2004
AUTHOR: Frohn
CHECK: Eichler
STD.:

Comment	Origin	Type	Signal-/TAG-No.	Path
Sequence on/off	Software button OS	1	HS 73101	14
Trip P73101	from page no.105/64	1	US 73101	16
Bottom valve open	End position switch	1	ZH 62009	18
Steam pressure	Value < Min	1	PL 73080	22
Bearing temp.	Value < Min1	1	TL 73140	24
Motor bearing	Value < Min1	1	TL 73141	26
Bearing temp.	Value > Max1	1	TH 73140	28
Motor bearing	Value > Max1	1	TH 73141	30

Function

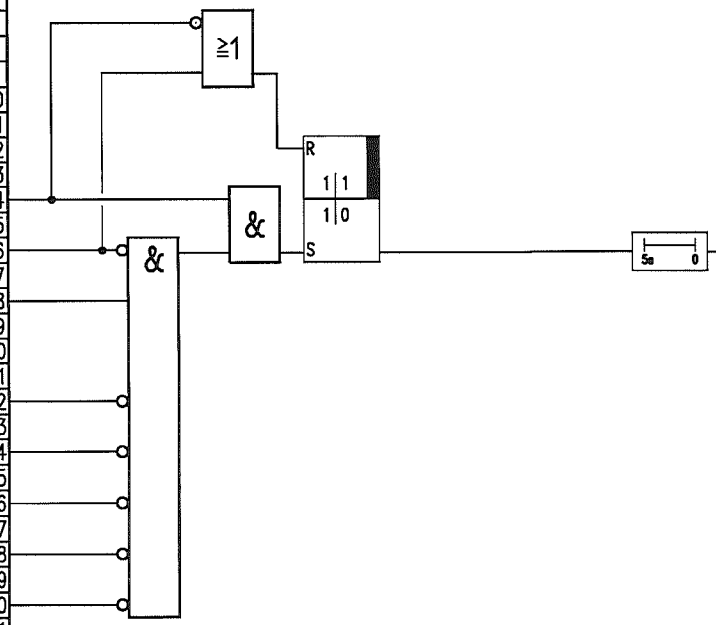

Path	Type	Signal/TAG-No.	Destination	Comment
62	1	P73101_Start_ok	Monitoring OS	Enabling after start
66	1	P73101_Start_ok	to page no. 109/6	
68	1	P73101_Start_ok	to page no. 110/14	
70	1	P73101_Start_ok	to page no. 111/14	
72	1	P73101_Start_ok	to page no. 112/8	
74	1	P73101_Start_ok	to page no. 113/14	
76	1	P73101_Start_ok	to page no. 114/14	
78	1	P73101_Start_ok	to page no. 115/14	
80	1	P73101_Start_ok	to page no. 121/28	

JOB NO.	FILE NO	REV.	DATE	REVISIONS	BY	CHKD.

PROJECT NAME: ASU KOSICE

PLANT PART: TANK FARM

AIR LIQUIDE

Air Liquide AGS GmbH
Fütingsweg 34
47805 Krefeld

DRAWING NAME: TANK STORAGE LIN PUMP P73101 SEQUENCE START / STOP

SIZE: A3

FUNKTION DIAGRAM

DRWG. NO.:

PROJ. NO.: K70101

REPLACES: REPLACED BY: BASED:

DATE: 26.11.2004
AUTHOR: Frohn
CHECK: Eichler
STD.:

Comment	Origin	Type	Signal-/TAG-No.	Path
				1
				2
				3
				4
				5
				6
				7
				8
				9
				10
				11
				12
				13
				14
				15
				16
				17
				18
				19
				20
				21
				22
				23
				24
				25
				26
				27
				28
				29
				30
				31
				32
				33
				34
				35
				36
				37
				38
				39
				40
				41
				42
				43
				44
				45
				46
				47
				48

Function

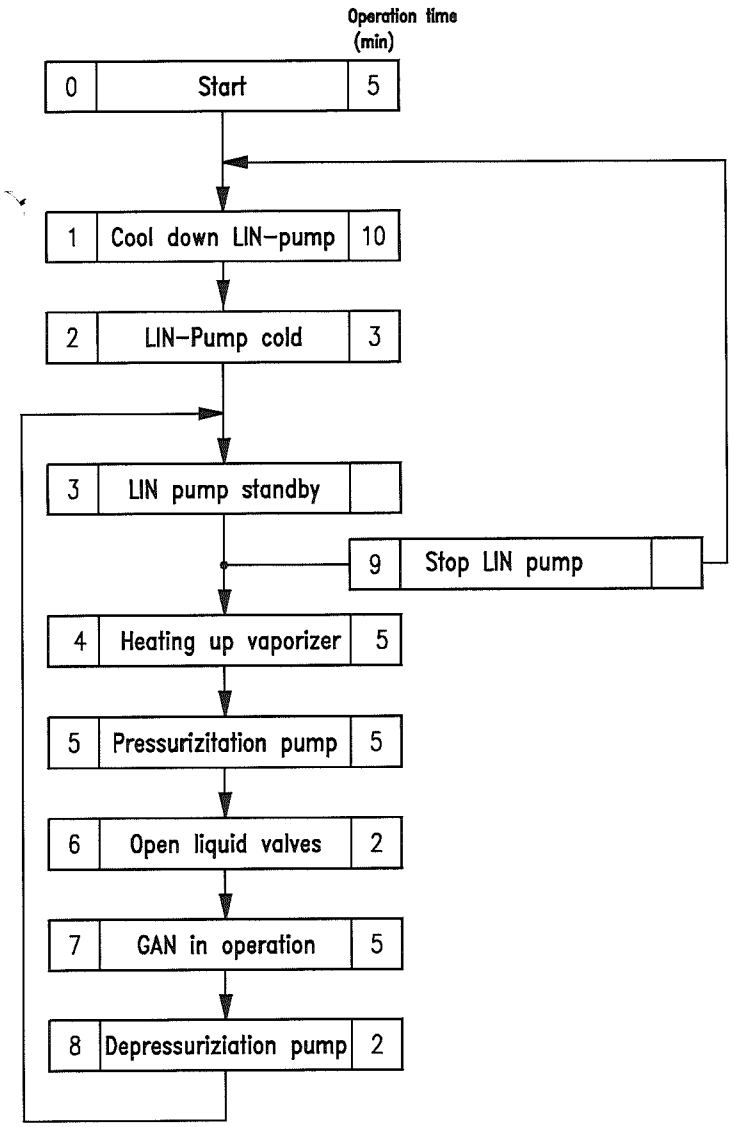

Path	Type	Signal/TAG-No.	Destination	Comment
51				
52				
53				
54				
55				
56				
57				
58				
59				
60				
61				
62				
63				
64				
65				
66				
67				
68				
69				
70				
71				
72				
73				
74				
75				
76				
77				
78				
79				
80				
81				
82				
83				
84				
85				
86				
87				
88				
89				
90				
91				
92				
93				
94				
95				
96				
97				
98				

JOB NO.	FILE NO	REV.	DATE	REVISIONS	BY	CHKD.

PROJECT NAME: ASU KOSICE

PLANT PART: TANK FARM

AIR LIQUIDE

Air Liquide AGS GmbH
Fütingsweg 34
47805 Krefeld

DRAWING NAME:
TANK STORAGE LIN PUMP P73101
ALL STEPS OF THE LIN PUMP SEQUENCE CONTROL

SIZE: A3

FUNKTION DIAGRAM

DRWG. NO.:

PROJ. NO.: K70101

REPLACES: REPLACED BY:

DATE: 26.11.2004
AUTHOR: Frohn
CHECK: Eichler
STD.:

BASED:

Comment	Origin	Type	Signal-/TAG-No.	Path
				1
				2
				3
				4
				5
				6
				7
				8
				9
				10
				11
				12
				13
				14
				15
				16
				17
				18
				19
				20
				21
				22
				23
				24
				25
				26
				27
				28
				29
				30
				31
				32
				33
				34
				35
				36
				37
				38
				39
				40
				41
				42
				43
				44
				45
				46
				47
				48

Function

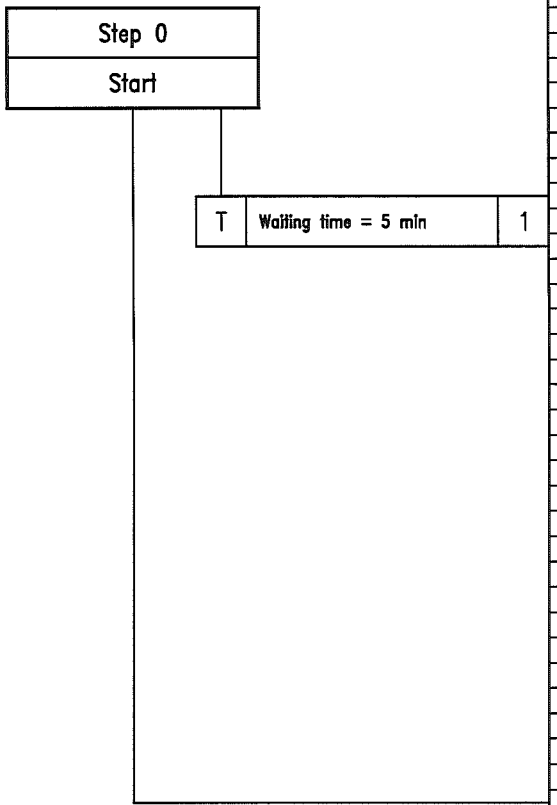

Path	Type	Signal/TAG-No.	Destination	Comment
51				
52				
53				
54				
55				
56				
57				
58				
59				
60				
61				
62				
63				
64				
65				
66				
67	1	Waitingtime0	to page no. 109/4	Time over initial
68				position
69				
70				
71				
72				
73				
74				
75				
76				
77				
78				
79				
80				
81				
82				
83				
84				
85				
86				
87				
88				
89				
90	1	Step0	to page no. 109/2	Initial position
91				
92				
93				
94				
95				
96				
97				
98				

JOB NO.	FILE NO	REV.	DATE	REVISIONS	BY	CHKD.

PROJECT NAME: ASU KOSICE

PLANT PART: TANK FARM

AIR LIQUIDE

Air Liquide AGS GmbH
Fütingsweg 34
47805 Krefeld

DRAWING NAME:
TANK STORAGE LIN PUMP P73101
NEW START OF THE SEQUENCE, ALL VALVES AT START POSITION

SIZE: A3

FUNKTION DIAGRAM

DRWG. NO.:

PROJ. NO.: K70101

REPLACES: REPLACED BY: BASED:

DATE: 26.11.2004
AUTHOR: Frohn
CHECK: Eichler
STD.:

Comment	Origin	Type	Signal-/TAG-No.	Path
Initial position	from page no.108/90	1	Step0	2
Time over	from page no.108/67	1	Waitingtime0	4
Enabling after start	from page no.106/66	1	P73101_Start_ok	6
LIN pump off	Check back signal	0	EH 73101	8
Liquid valve closed	from page no.124/63	0	HS 73150	10
Start cool down pump	Software button OS	1	HS 73101_CD	12
Stop LIN pump	from page no.117/97	1	Step09	19

Function

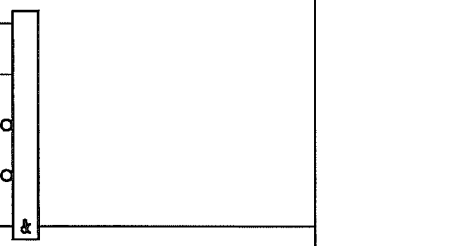

Step 1

Cool down pump

NS	US 73110	1
NS	PIC 73150	2
NS	TIC 73031	3
NS	HS 73102	4
NS	HS 72101	5
T	Waiting time 1 = 10 min	6
T	Min waiting time = 3 min	7
T	Monitoring = 15 min	8

The times are set by P73101_Start_Ok = 0 on the initial value

Path	Type	Signal/TAG-No.	Destination	Comment
77	1	Step1_US73110	to page no. 118/7	Open valve HV73110
79	1	Step1_H73170_R10	to page no. 119/2	Open HV73170 from 10% over ramp
81	1	Step1_T73031_W1	to page no. 123/28	Set point W = 30°C
83	1	Step1_H73102	to page no. 121/10	Frequency converter fan on
85	1	Step1_H73101_N1	to page no. 122/21	Frequency converter on 1000 rpm
87	1	Waitingtime01	to page no. 110/4	Time over
89	1	Minwaitingtime01	to page no. 110/8	Time over
91	1	KC73101_TÜ01	Alarm OS	"Check time over"
97	1	Step1	to page no. 110/2; 120/12	Cool down pump

JOB NO.	FILE NO.	REV.	DATE	REVISIONS	BY	CHKD.

PROJECT NAME: ASU KOSICE

PLANT PART: TANK FARM

AIR LIQUIDE

Air Liquide AGS GmbH
Fütingsweg 34
47805 Krefeld

DRAWING NAME: TANK STORAGE LIN PUMP P73101 COOL DOWN PUMP

SIZE: A3 — FUNKTION DIAGRAM

DRWG. NO.:

PROJ. NO.: K70101

REPLACES: REPLACED BY: BASED:

DATE: 26.11.2004
AUTHOR: Frohn
CHECK: Eichler
STD.:

Comment	Origin	Type	Signal-/TAG-No.	Path
				1
Cool down pump	from page no.109/97	1	Step01	2
				3
Time over	from page no.109/87	1	Waitingtime01	4
				5
Next step	Software push button	1	HS 73101_1	6
				7
Time over	from page no.109/89	1	Minwaitingtime01	8
				9
Cool down temp.	Value < Min	1	TL 73130	10
				11
Stop sequence	Software button OS	1	HS 73101_2	12
				13
Enabling after start	from page no.106/68	1	P73101_Start_ok	14
				15
				16
				17
HCV 73110 open	from page no.118/75	1	HS 73110	18
				19
HCV 73170 open	Y > 50%	1	H 73170_50	20
				21
Liquid valve closed	from page no.124/61	0	HS 73150	22
				23
				24
				25
				26
				27
				28
				29
				30
				31
				32
				33
				34
				35
				36
				37
				38
				39
				40
				41
				42
				43
				44
				45
				46
				47
				48

Function

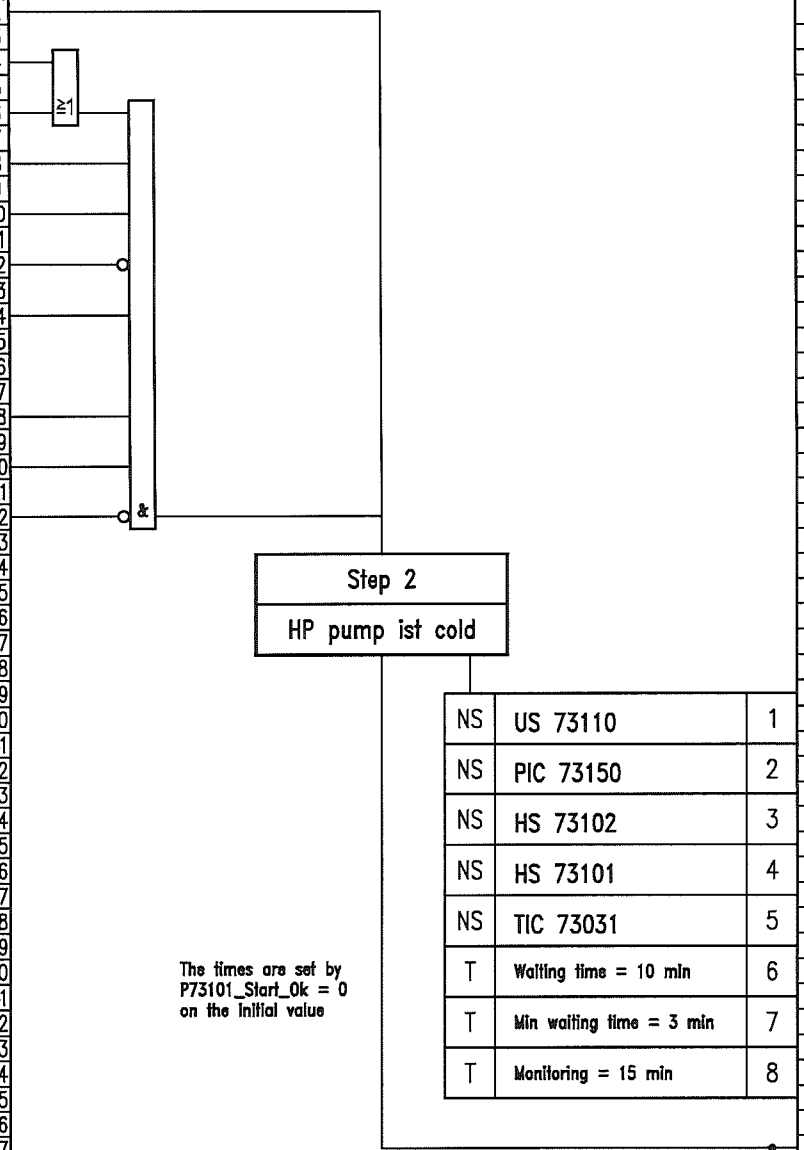

Path	Type	Signal/TAG-No.	Destination	Comment
51				
52				
53				
54				
55				
56				
57				
58				
59				
60				
61				
62				
63				
64				
65				
66				
67				
68				
69				
70				
71				
72				
73				
74				
75				
76				
77				
78				
79				
80	1	Step2_HS73110	to page no. 118/9	Open valve HV73110
81				
82	1	Step2_H73170_RC50	to page no. 119/12	Close valve HV73170
83				down to 50% over ramp
84	1	Step2_H73102	to page no. 121/12	Frequency converter
85				Fan on
86	1	Step2_H73101_N1	to page no. 122/23	Frequency converter
87				on 1000 rpm
88	1	Step2_T73031_W1	to page no. 123/30	Set point W = 30°C
89				
90	1	Waitingtime02	to page no. 111/4	time over
91				
92	1	Minwaitingtime02	to page no. 111/8	time over
93				
94	1	KC64101_T002	Alarm OS	"Check time error"
95				
96				
97	1	Step02	to page no. 111/2;	HP LIN pump is cold
98	1		120/14	

JOB NO.	FILE NO	REV.	DATE	REVISIONS	BY	CHKD.

PROJECT NAME: ASU KOSICE

PLANT PART: TANK FARM

AIR LIQUIDE

Air Liquide AGS GmbH
Fütingsweg 34
47805 Krefeld

DRAWING NAME: TANK STORAGE LIN PUMP P73101 PUMP COLD

SIZE: A3

FUNKTION DIAGRAM

DRWG. NO.:

PROJ. NO.: K70101

REPLACES: REPLACED BY: BASED:

DATE: 26.11.2004
AUTHOR: Frohn
CHECK: Eichler
STD.:

Comment	Origin	Type	Signal-/TAG-No.	Path
				1
Pump is cold	from page no.110/97	1	Step02	2
				3
Time over	from page no.110/90	1	Waitingtime02	4
				5
Next step	Software push button	1	HS 73101_1	6
				7
Time over	from page no.110/92	1	Minwaitingtime02	8
				9
Cool down temp.	Value < Min	1	TL 73130	10
				11
Stop sequence	Software button OS	1	HS 73101_2	12
				13
Enabling after start	from page no.107/70	1	P73101_Start_ok	14
				15
HP LIN pump on	Check back signal	1	EH 73101	16
				17
HV 73110 open	from page no.118/73	1	HS 73110	18
				19
HV 73170 open	Y > 40%	1	H 73170_40	20
				21
Liquid valve closed	from page no.124/59	0	HS 73150	22
				23
				24
				25
				26
				27
				28
				29
time over	from page no.116/90	1	Waitingtime08	30
				31
Next step	Software push button	1	HS 73101_1	32
				33
time over	from page no.116/92	1	Minwaitingtime08	34
				35
Pressure LIN pump	Value > Max1	1	PH 73150	36
				37
Breaking off	from page no.116/97	1	Step08	38
emergency supply				39
				40
				41
				42
				43
				44
				45
				46
				47
				48

Function

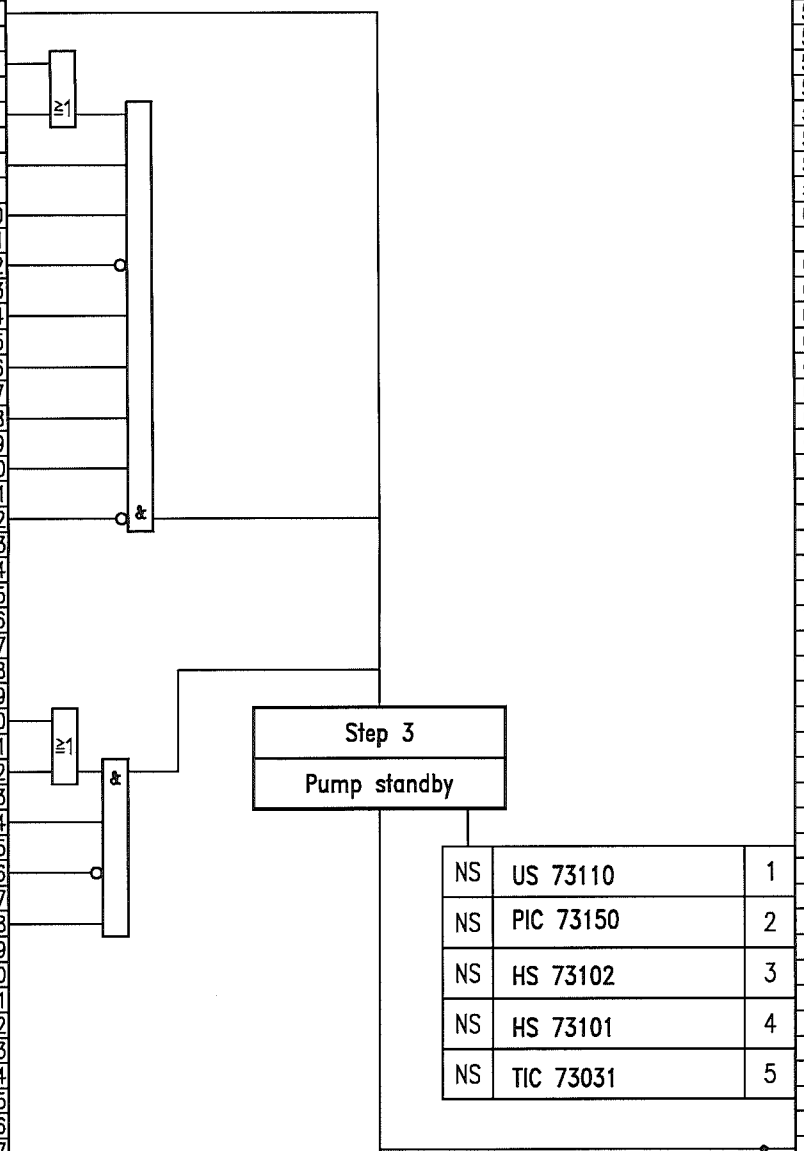

NS	US 73110	1
NS	PIC 73150	2
NS	HS 73102	3
NS	HS 73101	4
NS	TIC 73031	5

Path	Type	Signal/TAG-No.	Destination	Comment
51				
52				
53				
54				
55				
56				
57				
58				
59				
60				
61				
62				
63				
64				
65				
66				
67				
68				
69				
70				
71				
72				
73				
74				
75				
76				
77				
78				
79				
80				
81				
82				
83				
84				
85				
86	1	Step3_HS73110	to page no. 118/11	Open valve HV73110
87				
88	1	Step3_H73170_STP	to page no. 119/22	Valve HV73170 stop
89				
90	1	Step3_H73102	to page no. 121/14	Frequency converter
91				fan on
92	1	Step3_H73101_N1	to page no. 122/25	Frequency converter
93				on 1000 rpm
94	1	Step3_T73031_W1	to page no. 123/32	Set point W = 30°C
95				
96				
97	1	Step03	to page no. 112/2	HP LIN pump standby
98	1		to page no. 117/2;	120/16

JOB NO.	FILE NO.	REV.	DATE	REVISIONS	BY	CHKD.

PROJECT NAME: ASU KOSICE

PLANT PART: TANK FARM

AIR LIQUIDE

Air Liquide AGS GmbH
Fütingsweg 34
47805 Krefeld

DRAWING NAME:
TANK STORAGE LIN PUMP P73101
PUMP STANDBY

SIZE: A3

FUNKTION DIAGRAM

DRWG. NO.:

PROJ. NO.: K70101

REPLACES: REPLACED BY: BASED:

DATE: 26.11.2004
AUTHOR: Frohn
CHECK: Eichler
STD.:

Function

Comment	Origin	Type	Signal-/TAG-No.	Path
				1
HP LIN pump standby	from page no.111/97	1	Step03	2
				3
Cool down temp.	Value < Min	1	TL 73130	4
				5
Stop sequence	Software button OS	1	HS 73101_2	6
				7
Enabling after start	from page no.107/72	1	P73101_Start_ok	8
				9
HP LIN pump on	Check back signal	1	EH 73101	10
				11
HV 73110 open	from page no.118/71	1	HS 73110	12
				13
HV 73170 open	Y > 40%	1	H 73170_40	14
				15
Liquid valve closed	from page no.124/57	0	HS 74150	16
				17
Start emergency supply	Software push button	1	HS 73101_1	18
				19
				20
				21
				22
				23
				24
				25
				26
				27
				28
				29
				30
				31
				32
				33
				34
				35
				36
				37
				38
				39
				40
				41
				42
				43
				44
				45
				46
				47
				48

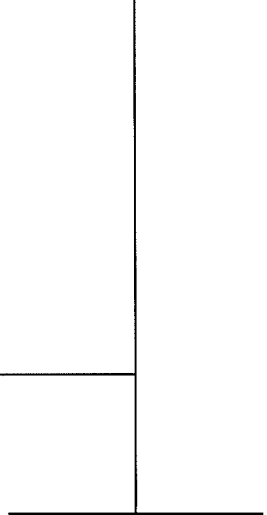

Step 4

Heating up vaporizer

NS	US 73110	1
NS	PIC 73150	2
NS	HS 73102	3
NS	HS 73101	4
NS	TIC 73031	5
T	Waiting time = 5 min	6
T	Min waiting time = 1 min	7
T	Monitoring = 8 min	8

The times are set by P73101_Start_Ok = 0 on the initial value

Path	Type	Signal/TAG-No.	Destination	Comment
51				
52				
53				
54				
55				
56				
57				
58				
59				
60				
61				
62				
63				
64				
65				
66				
67				
68				
69				
70				
71				
72				
73				
74				
75				
76				
77				
78				
79				
80	1	Step4_HS73110	to page no. 118/13	Open valve HV73110
81				
82	1	Step4_H73170_STP	to page no. 119/23	Valve HV73170 stop
83				
84	1	Step4_H73102	to page no. 121/16	Frequency converter
85				fan on
86	1	Step4_H73101_N1	to page no. 122/27	Frequency converter
87				on 1000 rpm
88	1	Step4_T73031_W2	to page no. 123/2	Set point W = 60°C
89				
90	1	Waitingtime04	to page no. 113/4	time over
91				
92	1	Minwaitingtime04	to page no. 113/8	time over
93				
94	1	KC73101_T004	Alarm OS	"Check time error"
95				
96				
97	1	Step04	to page no. 113/2;	Heating up vaporizer
98	1		120/18	

JOB NO.	FILE NO	REV.	DATE	REVISIONS	BY	CHKD.

PROJECT NAME: ASU KOSICE

PLANT PART: TANK FARM

AIR LIQUIDE

Air Liquide AGS GmbH
Fütingsweg 34
47805 Krefeld

DRAWING NAME: TANK STORAGE LIN PUMP P73101
START EMERGENCY SUPPLY
HEATING UP VAPORIZER

SIZE: A3

FUNKTION DIAGRAM

DRWG. NO.:

PROJ. NO.: K70101

REPLACES: REPLACED BY: BASED:

DATE: 26.11.2004
AUTHOR: Frohn
CHECK: Eichler
STD.:

Function

Comment	Origin	Type	Signal-/TAG-No.	Path
				1
Heating up vaporizer	from page no.112/97	1	Step04	2
				3
Time over	from page no.112/90	1	Waitingtime04	4
				5
Next step	Software push button	1	HS 73101_1	6
				7
Time over	from page no.112/92	1	Minwaitingtime04	8
				9
Liquid valve closed	from page no.124/55	0	HS 73150	10
				11
Stop sequence	Software button OS	1	HS 73101_2	12
				13
Enabling after start	from page no.106/74	1	P73101_Start_ok	14
				15
HP LIN pump on	Check back signal	1	EH 73101	16
				17
HV 73110 open	from page no.118/69	1	HS 73110	18
				19
Temp. vaporizer	Value > Max1	1	TH 73032	20

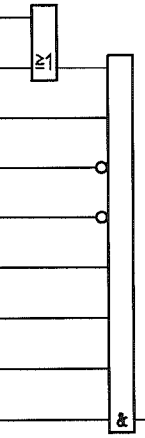

Step 5

Pressuriziation pump

NS	US 73110	1
NS	PIC 73150	2
NS	HS 73102	3
NS	HS 73101	4
NS	TIC 73031	5
T	Waiting time = 5 min	6
T	Min waiting time = 4 min	7
T	Monitoring = 6 min	8

The times are set by P73101_Start_Ok = 0 on the initial value

Path	Type	Signal/TAG-No.	Destination	Comment
51				
52				
53				
54				
55				
56				
57				
58				
59				
60				
61				
62				
63				
64				
65				
66				
67				
68				
69				
70				
71				
72				
73				
74				
75				
76				
77				
78				
79				
80	1	Step5_HS73110	to page no.118/15	Open valve HV73110
81				
82	1	Step5_H64170_RC	to page no.119/25	Close valve HV73170
83				over ramp
84	1	Step5_HS73102	to page no. 121/18	Frequency converter
85				fan on
86	1	Step5_H73101_N2	to page no. 122/29	Frequency converter
87				Pump P73101 on
88	1	Step5_T73031_W2	to page no. 123/4	Set point W = 60°C
89				
90	1	Waitingtime05	to page no. 114/4	time over
91				
92	1	Minwaitingtime05	to page no. 114/8	time over
93				
94	1	KC73101_T005	Alarm OS	"Check time error"
95				
96				
97	1	Step05	to page no. 114/2;	Pressuriziation pump
98	1		120/20	

JOB NO.	FILE NO	REV.	DATE	REVISIONS	BY	CHKD.

PROJECT NAME: ASU KOSICE

PLANT PART: TANK FARM

AIR LIQUIDE

Air Liquide AGS GmbH
Fittingsweg 34
47805 Krefeld

DRAWING NAME: TANK STORAGE LIN PUMP P73101 PRESSURIZIATION PUMP

SIZE: A3

FUNKTION DIAGRAM

DRWG. NO.:

PROJ. NO.: K70101

REPLACES: REPLACED BY: BASED:

DATE: 26.11.2004
AUTHOR: Frohn
CHECK: Eichler
STD.:

Function

Comment	Origin	Type	Signal-/TAG-No.	Path
				1
Pressuriziation pump	from page no.113/97	1	Step05	2
				3
Time over	from page no.113/90	1	Waitingtime05	4
				5
Next step	Software push button	1	HS 73101_1	6
				7
Time over	from page no.113/92	1	Minwaitingtime05	8
				9
Liquid valve closed	from page no.124/53	0	HS 73150	10
				11
Stop sequence	Software button OS	1	HS 73101_2	12
				13
Enabling after start	from page no.106/76	1	P73101_Start_ok	14
				15
HP LIN pump on	Check back signal	1	EH 73101	16
				17
HV 73110 open	from page no.118/67	1	HS 73110	18
				19
Pressure HP pump	Value > Max1	1	PH 73150	20
				21
				22
				23
				24
				25
				26
				27
				28
				29
				30
				31
				32
				33
				34
				35
				36
				37
				38
				39
				40
				41
				42
				43
				44
				45
				46
				47
				48

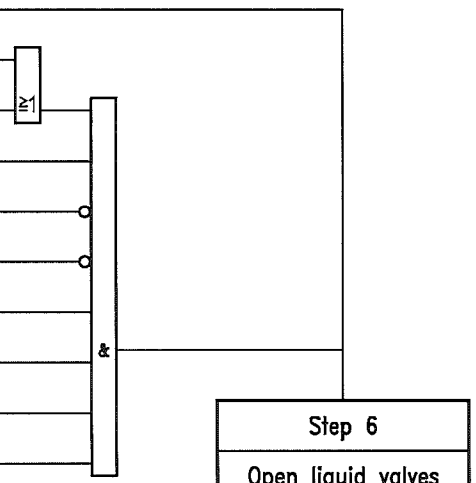

Step 6

Open liquid valves

NS	US 73110	1
NS	PIC 73150	2
NS	HS 73102	3
NS	HS 73101	4
NS	TIC 73031	5
NS	HS 73150	6
	Spare	7
NS	PIC 73050	8
T	Waiting time = 2 min	9
T	Min waiting time = 1 min	10
T	Monitoring = 3 min	11

The times are set by P73101_Start_Ok = 0 on the initial value

Path	Type	Signal/TAG-No.	Destination	Comment
51				
52				
53				
54				
55				
56				
57				
58				
59				
60				
61				
62				
63				
64				
65				
66				
67				
68				
69				
70				
71				
72				
73				
74	1	Step6_HS73110	to page no. 118/17	Open valve HV73110
75				
76	1	Step6_H73170_RC	to page no. 119/26	Close valve HV73170
77				over ramp
78	1	Step6_H73102	to page no. 121/20	Frequency converter
79				fan on
80	1	Step6_H73101_N2	to page no. 122/31	Frequency converter
81				Pump P73101 on
82	1	Step6_T73031_W2	to page no. 123/6	Set point W = 60°C
83				
84	1	Step6_HS73150	to page no. 124/9	Open valve HV64150
85				
86				
87				
88	1	Step6_PC73050	to page no. 125/20	Enable pressure controller
89				W = 20 bar
90	1	Waitingtime06	to page no. 115/4	time over
91				
92	1	Minwaitingtime06	to page no. 115/8	time over
93				
94	1	KC73101_TÜ06	Alarm OS	"Check time error"
95				
96				
97	1	Step06	to page no. 115/2;	Open liquid valves
98	1		120/22	

JOB NO.	FILE NO.	REV.	DATE	REVISIONS	BY	CHKD.

PROJECT NAME: ASU KOSICE

PLANT PART: TANK FARM

AIR LIQUIDE

Air Liquide AGS GmbH
Fütingsweg 34
47805 Krefeld

DRAWING NAME: TANK STORAGE LINX PUMP P73101 OPEN LIQUID VALVES

SIZE: A3 | FUNKTION DIAGRAM

DRWG. NO.:

PROJ. NO.: K70101

REPLACES: | REPLACED BY: | BASED:

DATE: 26.11.2004
AUTHOR: Frohn
CHECK: Eichler
STD.:

Comment	Origin	Type	Signal-/TAG-No.	Path
				1
Open liquid valves	from page no.114/97	1	Step06	2
				3
Time over	from page no.114/90	1	Waitingtime06	4
				5
Next step	Software push button	1	HS 73101_1	6
				7
Time over	from page no.114/92	1	Minwaitingtime06	8
				9
Liquid valve open	from page no. 34/65	1	HS 73150	10
				11
Stop sequence	Software button OS	1	HS 73101_2	12
				13
Enabling after start	from page no.106/78	1	P73101_Start_ok	14
				15
HP LIN pump on	Check back signal	1	EH 73101	16
				17
HV 73110 open	from page no.118/65	1	HS 73110	18
				19
HV 73170 closed	Y < 1%	1	HC 73170_0	20
				21
				22
				23
				24
				25
				26
				27
				28
				29
				30
				31
				32
				33
				34
				35
				36
				37
				38
				39
				40
				41
				42
				43
				44
				45
				46
				47
				48

Function

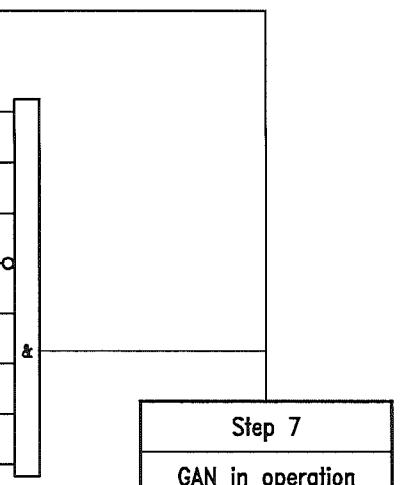

Step 7

GAN in operation

NS	US 73110	1
NS	PIC 73150	2
NS	HS 73102	3
NS	HS 73101	4
NS	TIC 73031	5
NS	HS 73150	6
NS	PIC 73158	7
NS	PIC 73050	8
T	Waiting time = 5 min	9

The times are set by P73101_Start_Ok = 0 on the initial value

Path	Type	Signal/TAG-No.	Destination	Comment
51				
52				
53				
54				
55				
56				
57				
58				
59				
60				
61				
62				
63				
64				
65				
66				
67				
68				
69				
70				
71				
72				
73				
74	1	Step7_HS73110	to page no. 118/19	Open valve HV73110
75				
76	1	Step7_H73170_RC	to page no. 119/36	Close valve HV73170
77				over ramp
78	1	Step7_H73102	to page no. 121/22	Frequency converter
79				fan on
80	1	Step7_H73101_N2	to page no. 122/33	Frequency converter
81				Pump P73101 on
82	1	Step7_T73031_W2	to page no. 123/8	Set point W = 60°C
83				
84	1	Step7_HS73150	to page no. 145/24	Open valve HV73150
85				
86		Step7_PC73158	to page no. 125/22	Enable pressure controller
87				W = 22 bar
88	1	Step7_PC73050	to page no. 125/22	Enable pressure controller
89				W = 22 bar
90	1	Waitingtime07	to page no. 116/20	Time over
91				
92				
93				
94				
95				
96				
97	1	Step07	to page no. 116/2;	GAN in operation
98	1		120/26	

JOB NO.	FILE NO	REV.	DATE	REVISIONS	BY	CHKD.

PROJECT NAME: ASU KOSICE

PLANT PART: TANK FARM

AIR LIQUIDE

Air Liquide AGS GmbH
Fütingsweg 34
47805 Krefeld

DRAWING NAME: TANK STORAGE LIN PUMP P73101 BACK UP GAN SUPPLY IN OPERATION

SIZE: A3

FUNKTION DIAGRAM

DRWG. NO.:

PROJ. NO.: K70101

REPLACES: REPLACED BY: BASED:

DATE: 26.11.2004
AUTHOR: Frohn
CHECK: Eichler
STD.:

Function

Comment	Origin	Type	Signal-/TAG-No.	Path
GAN in operation	from page no.115/97	1	Step07	2
Time over	from page no.115/90	1	Waitingtime07	20
Stop emergency supply	Software push button	1	HS 73101_1	22

&

Step 8

Depressuriziation pump

NS	US 73110	1
NS	PIC 73150	2
NS	HS 73102	3
NS	HS 73101	4
NS	TIC 73031	5
T	Waiting time = 2 min	6
T	Min waiting time = 1 min	7
T	Monitoring = 3 min	8

The times are set by P73101_Start_Ok = 0 on the initial value

Path	Type	Signal/TAG-No.	Destination	Comment
80	1	Step8_HS73110	to page no. 118/21	Open valve HV73110
82	1	Step8_H73170_R50	to page no. 119/38	Open valve HV73170 to 50% over ramp
84	1	Step8_H73102	to page no. 121/24	Frequency controller fan on
86	1	Step8_H73101_N1	to page no. 122/35	Frequency converter on 1000 rpm
88	1	Step8_T73031_W1	to page no. 123/34	Set point W = 30°C
90	1	Waitingtime08	to page no. 111/30	time over
92	1	Minwaitingtime08	to page no. 111/34	time over
94	1	KC73101_T008	Alarm OS	"Check time error"
97	1	Step08	to page no. 111/38 120/24	Depressuriziation pump

JOB NO.	FILE NO	REV.	DATE	REVISIONS	BY	CHKD.

PROJECT NAME: ASU KOSICE

PLANT PART: TANK FARM

AIR LIQUIDE

Air Liquide AGS GmbH
Fütingsweg 34
47805 Krefeld

DRAWING NAME:
TANK STORAGE LIN PUMP P73101
STOP EMERGENCY SUPPLY
DEPRESSURIZIATION PUMP

SIZE: A3 — FUNKTION DIAGRAM

DRWG. NO.:

PROJ. NO.: K70101

REPLACES: REPLACED BY: BASED:

DATE: 26.11.2004
AUTHOR: Frohn
CHECK: Eichler
STD.:

Comment	Origin	Type	Signal-/TAG-No.	Path
				1
LIN pump standby	from page no.111/98	1	Step03	2
				3
				4
				5
				6
				7
				8
				9
				10
				11
				12
				13
				14
Stop LIN pump	Software push button	1	HL 73101	15
				16
Trip P73101	from page no.105/66	1	US 73101	17
				18
				19
				20
				21
				22
				23
				24
				25
				26
				27
				28
				29
				30
				31
				32
				33
				34
				35
				36
				37
				38
				39
				40
				41
				42
				43
				44
				45
				46
				47
				48

Function

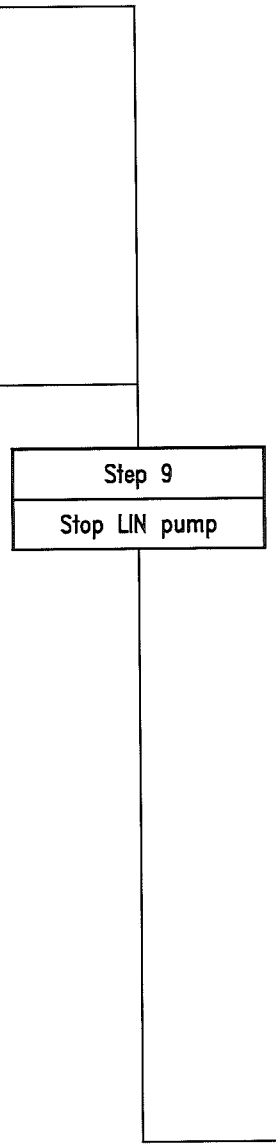

Path	Type	Signal/TAG-No.	Destination	Comment
51				
52				
53				
54				
55				
56				
57				
58				
59				
60				
61				
62				
63				
64				
65				
66				
67				
68				
69				
70				
71				
72				
73				
74				
75				
76				
77				
78				
79				
80				
81				
82				
83				
84				
85				
86				
87				
88				
89				
90				
91				
92				
93				
94				
95				
96				
97	1	Step09	to page no 109/19	Stop LIN pump
98				

JOB NO.	FILE NO	REV.	DATE	REVISIONS	BY	CHKD.

PROJECT NAME: ASU KOSICE

PLANT PART: TANK FARM

AIR LIQUIDE

Air Liquide AGS GmbH
Fütingsweg 34
47805 Krefeld

DRAWING NAME:
TANK STORAGE LIN PUMP P73101
STOP PUMP

SIZE: A3

FUNKTION DIAGRAM

DRWG. NO.:

PROJ. NO.: K70101

REPLACES: REPLACED BY: BASED:

DATE: 26.11.2004
AUTHOR: Frohn
CHECK: Eichler
STD.:

Comment	Origin	Type	Signal-/TAG-No.	Path
Cool down LIN-pump	from page no.109/77	1	Step1_US73110	7
LIN-pump cold	from page no.110/80	1	Step2_US73110	9
LIN-pump standby	from page no.111/86	1	Step3_US73110	11
Heating up vaporizer	from page no.112/80	1	Step4_US73110	13
Pressuriziation pump	from page no.113/80	1	Step5_US73110	15
Open liquid valves	from page no.114/74	1	Step6_US73110	17
GAN in operation	from page no.115/74	1	Step7_US73110	19
Depressuriziation	from page no.116/80	1	Step8_US73110	21
Trip LIN-pump	from page no.105/68	1	US 73101	39
LIN-pump off	Check back signal	0	EH 73101	41

Function

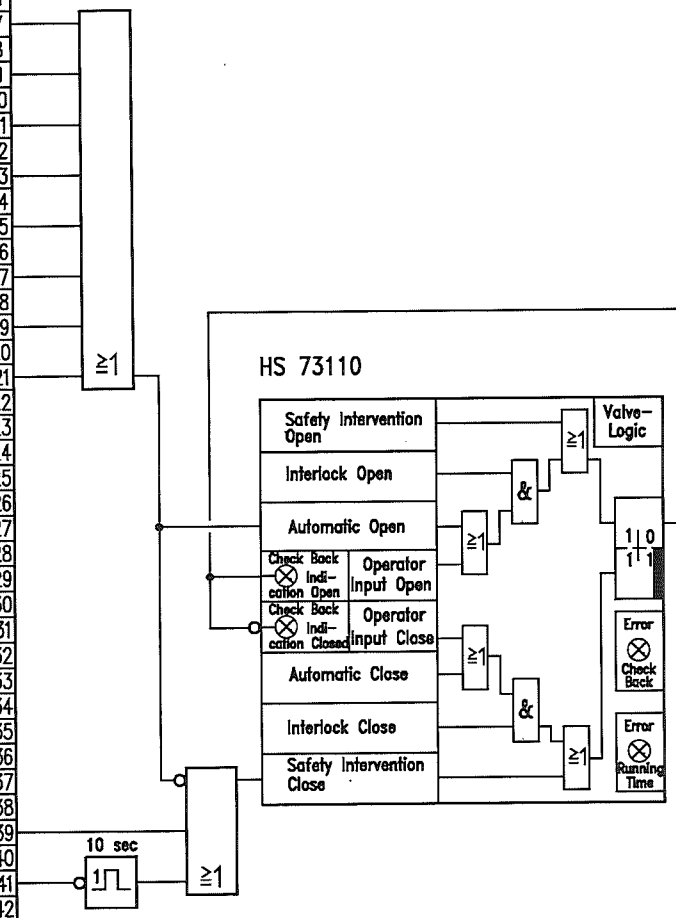

Path	Type	Signal/TAG-No.	Destination	Comment
65	1	US 73110	to page no.115/18	
67	1	US 73110	to page no.114/18	
69	1	US 73110	to page no.113/18	
71	1	US 73110	to page no.112/14	
73	1	US 73110	to page no.111/18	
75	0	US 73110	to page no.110/18	
77	1	UV 73110	Solenoid valve	Open valve HV73110
78				LIN from B72001

JOB NO.	FILE NO	REV.	DATE	REVISIONS	BY	CHKD.

PROJECT NAME: ASU KOSICE

PLANT PART: TANK FARM

AIR LIQUIDE

Air Liquide AGS GmbH
Fütingsweg 34
47805 Krefeld

DRAWING NAME:
TANK STORAGE LIN PUMP P73101
LIN FROM LP-TANK B72001
HS 73110

SIZE: A3

FUNKTION DIAGRAM

DRWG. NO.:

PROJ. NO.: K70101

REPLACES: REPLACED BY: BASED:

DATE: 26.11.2004
AUTHOR: Frohn
CHECK: Eichler
STD.:

Rang.	Text	Herkunft	Typ	Signalbezeichnung	Pfad
					1
	Cool down valve	from page no.109/79	1	Step1_H73170_R10	2
	ramp upwards				3
					4
					5
					6
					7
	Start value	Control value 10%	E		8
					9
					10
					11
	Cool down valve	from page no.110/82	1	Step2_H73170_RC50	12
	downwards to 50%				13
					14
					15
					16
					17
	End value	Control value 50%	E		18
					19
					20
					21
	Cool down valve	from page no.111/88	1	Step3_H73170_STP	22
	ramp stop	from page no.112/84	1	Step4_H73170_STP	23
					24
	Cool down valve	from page no.113/82	1	Step5_H73170_RC	25
	closing over ramp	from page no.114/76	1	Step6_H73170_RC	26
					27
					28
					29
					30
					31
					32
					33
					34
					35
	Cool down valve	from page no.115/76	1	Step7_H73170_CI	36
	closing immediatly				37
	Cool down valve	from page no.116/82	1	Step8_H73170_R50	38
	ramp upwards				39
					40
					41
					42
					43
	End value	Control value 50%	E		44
					45
					46
					47
					48

Verknüpfung

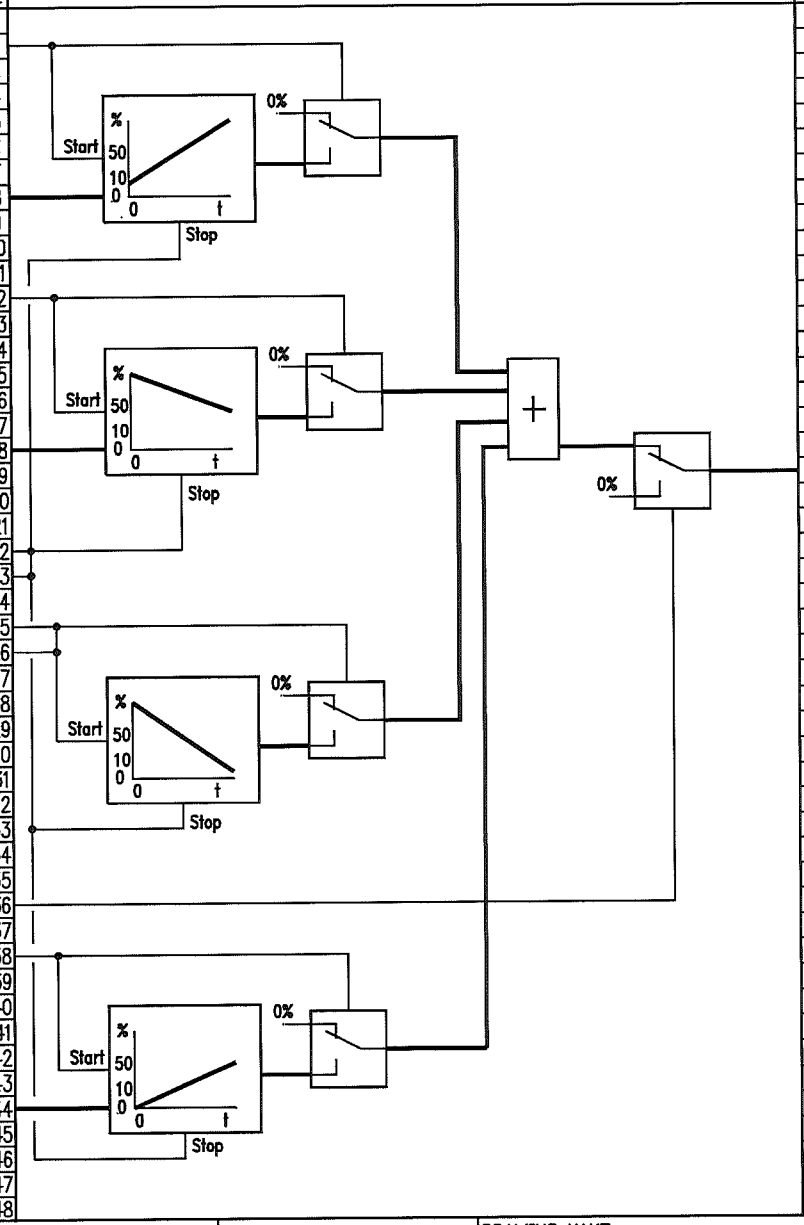

Pfad	Typ	Signalbezeichnung	Verwendung	Text	Rang.
51					
52					
53					
54					
55					
56					
57					
58					
59					
60					
61					
62					
63					
64					
65					
66					
67					
68					
69	E	HC73170_Man	to page no. 120/8	Control value manual	
70					
71					
72					
73					
74					
75					
76					
77					
78					
79					
80					
81					
82					
83					
84					
85					
86					
87					
88					
89					
90					
91					
92					
93					
94					
95					
96					
97					
98					

JOB NO.	FILE NO.	REV.	DATE	REVISIONS	BY	CHKD.

PROJECT NAME: ASU KOSICE

PLANT PART: TANK FARM

AIR LIQUIDE

Air Liquide AGS GmbH
Fütingsweg 34
47805 Krefeld

DRAWING NAME:
TANK STORAGE LIN PUMP P73101
COOL DOWN VALVE HV73170

SIZE: A3

FUNKTION DIAGRAM

DRWG. NO.:

PROJ. NO.: K70101

REPLACES: REPLACED BY:

DATE: 26.11.2004
AUTHOR: Frohn
CHECK: Eichler
STD.:

Page no. 119
Of 160 Pages

BASED:

Comment	Origin	Type	Signal-/TAG-No.	Path
				1
				2
				3
				4
Discharge P73101	P-transmitter	E	PT 73150	5
				6
				7
Control value manual	from page no.119/69	E	HC64170_Man	8
				9
				10
				11
Cool down pump	from page no.109/98	1	Step01	12
				13
HP pump is cold	from page no.110/98	1	Step02	14
				15
Pump standby	from page no.111/98	1	Step03	16
				17
Heating up vaporizer	from page no.112/98	1	Step04	18
				19
Pressuriziation pump	from page no.113/98	1	Step05	20
				21
Open liquid valves	from page no.114/98	1	Step06	22
				23
Depressuriziation	from page no.116/98	1	Step08	24
				25
GAN in operation	from page no.115/98	1	Step07	26
				27
				28
				29
				30
				31
				32
				33
				34
				35
				36
				37
				38
				39
				40
				41
				42
				43
				44
				45
				46
				47
				48

Function

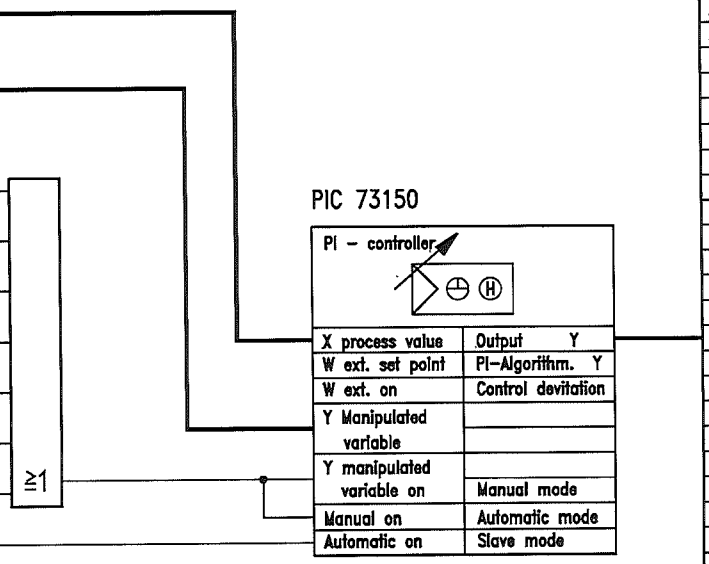

Path	Type	Signal/TAG-No.	Destination	Comment
51				
52				
53				
54				
55				
56				
57				
58				
59				
60				
61				
62				
63				
64				
65				
66				
67				
68	E	HV 73170	Positioner 0-100%	Cool down valve
69			= 4-20mA	HV73170
70				
71				
72				
73				
74				
75				
76				
77				
78				
79				
80				
81				
82				
83				
84				
85				
86				
87				
88				
89				
90				
91				
92				
93				
94				
95				
96				
97				
98				

JOB NO.	FILE NO	REV.	DATE	REVISIONS	BY	CHKD.

PROJECT NAME: ASU KOSICE

PLANT PART: TANK FARM

AIR LIQUIDE

Air Liquide AGS GmbH
Fütingsweg 34
47805 Krefeld

DRAWING NAME:
TANK STORAGE LIN
LIN BACK UP PUMP P73101
DISCHARGE PRESSURE PIC73150
COOL DOWN VALVE HV73170

SIZE: A3

FUNKTION DIAGRAM

DRWG. NO.:

PROJ. NO.: K70101

REPLACES: REPLACED BY: BASED:

DATE: 26.11.2004
AUTHOR: Frohn
CHECK: Eichler
STD.:

Comment	Origin	Type	Signal-/TAG-No.	Path
Cool down pump	from page no.109/83	1	Step1_HS73102	10
HP pump is cold	from page no.110/84	1	Step2_HS73102	12
HP Pump standby	from page no.111/90	1	Step3_HS73102	14
Heating up vaporizer	from page no.112/84	1	Step4_HS73102	16
Pressuriziation pump	from page no.113/84	1	Step5_HS73102	18
Open liquid valves	from page no.114/78	1	Step6_HS73102	20
GAN in operation	from page no.115/78	1	Step7_HS73102	22
Depressuriziation	from page no.116/84	1	Step8_HS73102	24
Ready to start	from page no.106/80	1	P73101_Start_Ok	28
LIN-pump on	Check back signal	1	EH 73101	32
Trip LIN-Pump	from page no.105/70	1	US 73101	40

Function

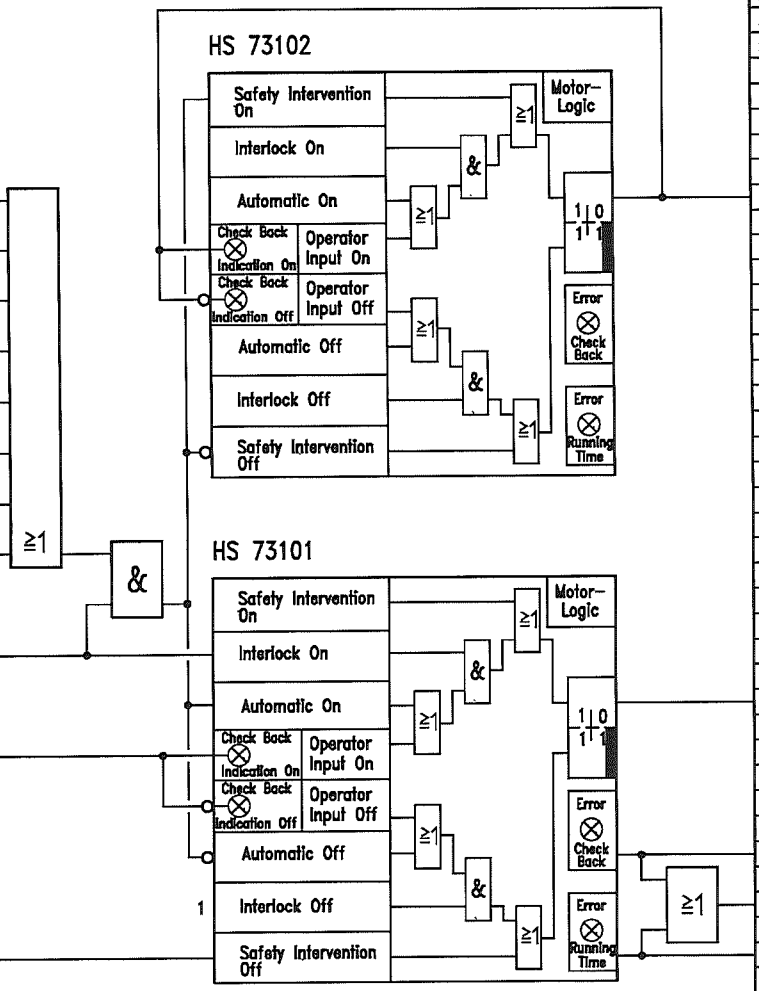

Path	Type	Signal/TAG-No.	Destination	Comment
60	1	HS 73102	Signal to MCC	Frequency converter fan on
80	1	HS 73101	Signal to MCC	Frequency converter LIN-pump P73101 on
86	1	HS 73101_CB	Alarm OS	"Check back error"
88	1	HS 73101_fall	to page no.105/23	LIN-pump fall
90	1	HS 73101_RT	Alarm OS	"Running time error"

JOB NO.	FILE NO	REV.	DATE	REVISIONS	BY	CHKD.

PROJECT NAME: ASU KOSICE

PLANT PART: TANK FARM

AIR LIQUIDE

Air Liquide AGS GmbH
Fütingsweg 34
47805 Krefeld

DRAWING NAME:
TANK STORAGE LIN PUMP P73101
FREQUENZY CONVERTER HS 73101
FREQ. CONVERTER FAN HS 73102

SIZE A3 — FUNKTION DIAGRAM

DRWG. NO.

PROJ. NO. K70101

REPLACES: REPLACED BY: BASED:

DATE 26.11.2004
AUTHOR Frohn
CHECK Eichler
STD.

Comment	Origin	Type	Signal-/TAG-No.	Path
Low speed	Constant	E	1000 rpm/min	15
Cool down pump	from page no.109/85	1	Step1_H73101_N1	21
HP pump is cold	from page no.110/86	1	Step2_H73101_N1	23
HP Pump standby	from page no.111/92	1	Step3_H73101_N1	25
Heating up vaporizer	from page no.112/86	1	Step4_H73101_N1	27
Pressuriziation pump	from page no.113/86	1	Step5_H73101_N2	29
Open liquid valves	from page no.114/80	1	Step6_H73101_N2	31
GAN in operation	from page no.115/80	1	Step7_H72101_N2	33
Depressuriziation	from page no.116/86	1	Step8_H73101_N1	35

Function

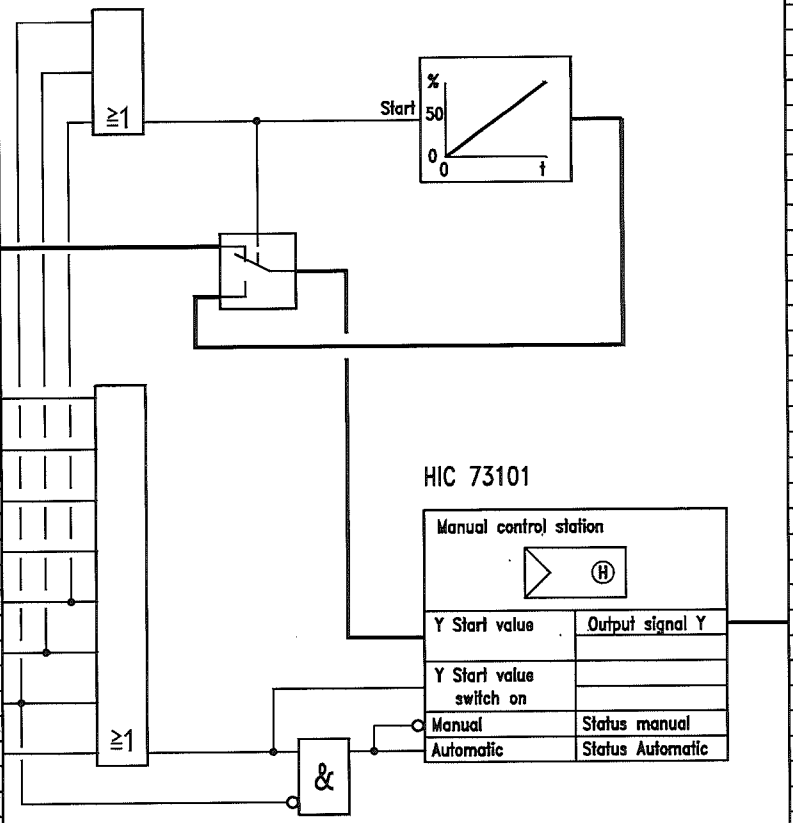

Path	Type	Signal/TAG-No.	Destination	Comment
80	1	SC 73101	Frequency converter	Speed HP LIN pump
81			0-100% = 4-20mA	

JOB NO.	FILE NO.	REV.	DATE	REVISIONS	BY	CHKD.

PROJECT NAME: ASU KOSICE

PLANT PART: TANK FARM

AIR LIQUIDE

Air Liquide AGS GmbH
Fittingsweg 34
47805 Krefeld

DRAWING NAME: TANK STORAGE LIN PUMP P73101
SPEED FREQUENCY CONVERTER
HIC 73101

SIZE: A3

FUNKTION DIAGRAM

DRWG. NO.:

PROJ. NO.: K70101

REPLACES: REPLACED BY: BASED:

DATE: 26.11.2004
AUTHOR: Frohn
CHECK: Eichler
STD.:

Path	Comment	Origin	Type	Signal-/TAG-No.
1				
2	Heating up vaporizer	from page no.112/88	1	Step4_T73031_W2
3	Heating up vaporizer	from page no.133/88	1	Step14_T73031_W2
4	Pressuriziation pump	from page no.113/88	1	Step5_T73031_W2
5	Pressuriziation pump	from page no.134/88	1	Step15_T73031_W2
6	Open liquid valves	from page no.114/82	1	Step6_T73031_W2
7	Open liquid valves	from page no.135/82	1	Step16_T73031_W2
8	GAN in operation	from page no.115/82	1	Step7_T73031_W2
9	GAN in operation	from page no.136/82	1	Step1_T73031_W2
10				
11	Setpoint 30°C	Constant	E	TC73031_W1
12				
13	Setpoint 60°C	Constant	E	TC73031_W2
14				
15				
16	Measure fail	PCS	1	T73031_fail
17				
18				
19	Water bath vaporizer	Pt100	E	TE 73031
20				
21	Water bath vaporizer	Pt100	E	TE 73032
22				
23				
24				
25				
26				
27				
28	Cool down pump	from page no.109/81	1	Step1_T73031_W1
29	Cool down pump	from page no.130/81	1	Step11_T73031_W1
30	HP pump is cold	from page no.110/88	1	Step2_T73031_W1
31	HP pump is cold	from page no.131/88	1	Step12_T73031_W1
32	Pump standby	from page no.111/94	1	Step3_T73031_W1
33	Pump standby	from page no.132/94	1	Step13_T73031_W1
34	Depressuration	from page no.116/88	1	Step8_T73031_W1
35	Depressuration	from page no.137/88	1	Step18_T73031_W1
36				
37				
38				
39				
40				
41				
42				
43				
44				
45				
46				
47				
48				

Function

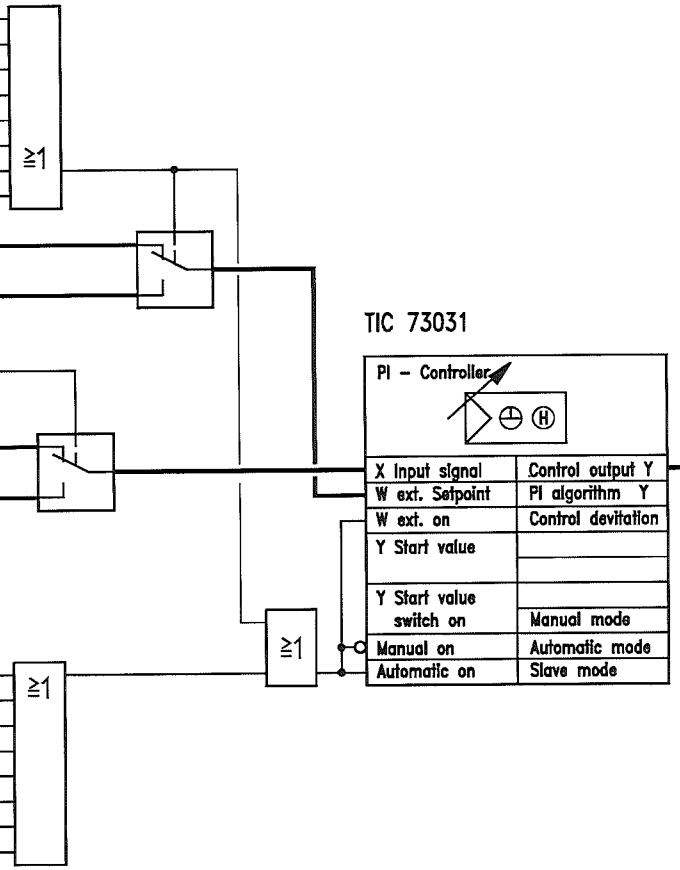

Path	Type	Signal/TAG-No.	Destination	Comment
51				
52				
53				
54				
55				
56				
57				
58				
59				
60				
61				
62				
63				
64				
65				
66				
67				
68				
69				
70	1	TV 73081	Positioner 0–100%	Control valve steam
71			= 4–20mA	TV 73081
72				
73				
74				
75				
76				
77				
78				
79				
80				
81				
82				
83				
84				
85				
86				
87				
88				
89				
90				
91				
92				
93				
94				
95				
96				
97				
98				

JOB NO.	FILE NO	REV.	DATE	REVISIONS	BY	CHKD.

PROJECT NAME: ASU KOSICE

PLANT PART: TANK FARM

AIR LIQUIDE

Air Liquide AGS GmbH
Fütingsweg 34
47805 Krefeld

DRAWING NAME:
TANK STORAGE GAN BACK UP
WATER BATH VAPORIZER
TIC 73031

SIZE: A3

FUNKTION DIAGRAM

DRWG. NO.:

PROJ. NO.: K70101

REPLACES: REPLACED BY: BASED:

DATE: 26.11.2004
AUTHOR: Frohn
CHECK: Eichler
STD.:

Comment	Origin	Type	Signal-/TAG-No.	Path
Open liquid valves	from page no.114/84	1	Step6_HS73150	9
GAN in operation	from page no.115/84	1	Step7_HS73150	11
Trip P73101	from page no.105/72	1	US 73101	27

Function

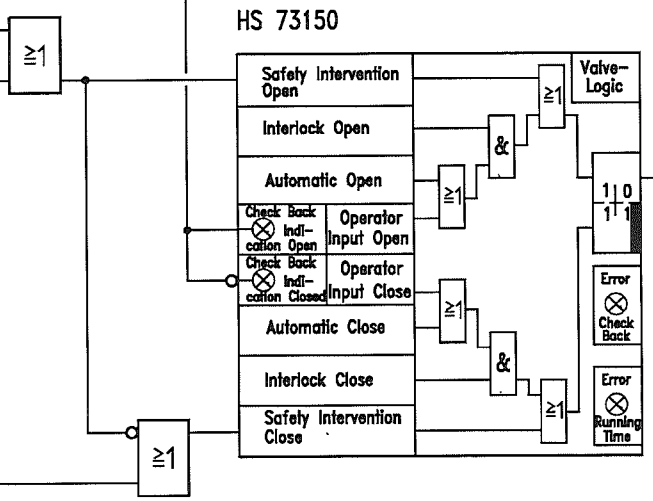

Path	Type	Signal/TAG-No.	Destination	Comment
53	0	HS 73150	to page no. 114/10	
55	0	HS 73150	to page no. 113/10	
57	0	HS 73150	to page no. 112/16	
59	0	HS 73150	to page no. 111/22	
61	0	HS 73150	to page no. 110/22	
63	0	HS 73150	to page no. 109/10	
65	1	HS 73150	to pgae no. 115/10	
67	1	HV 73150	Solenoid valve	Open liquid valve HV 73150

JOB NO.	FILE NO	REV.	DATE	REVISIONS	BY	CHKD.

PROJECT NAME: ASU KOSICE

PLANT PART: TANK FARM

AIR LIQUIDE
Air Liquide AGS GmbH
Fütingsweg 34
47805 Krefeld

DRAWING NAME: TANK STORAGE LIN PUMP P73101 LIQUID VALVE HV73150

SIZE: A3 — FUNKTION DIAGRAM

DRWG. NO.:

PROJ. NO.: K70101

REPLACES: REPLACED BY: BASED:

DATE: 26.11.2004
AUTHOR: Frohn
CHECK: Eichler
STD.:

Comment	Origin	Type	Signal-/TAG-No.	Path
GAN beh. vaporizer	P-transmitter	E	PT 73050	10
Trip P73201	from page no.126/74	1	US 73201	15
Trip P73101	from page no.105/74	1	US 73101	17
Open liquid valves	from page no.114/88	1	Step6_P73050	20
GAN in operation	from page no.115/88	1	Step7_P73050	22
Open liquid valves	from page no.135/88	1	Step16_P73050	24
GAN in operation	from page no.136/88	1	Step17_P73050	26
GAN beh. vaporizer	Pt100	E	TE 73050	34

Function

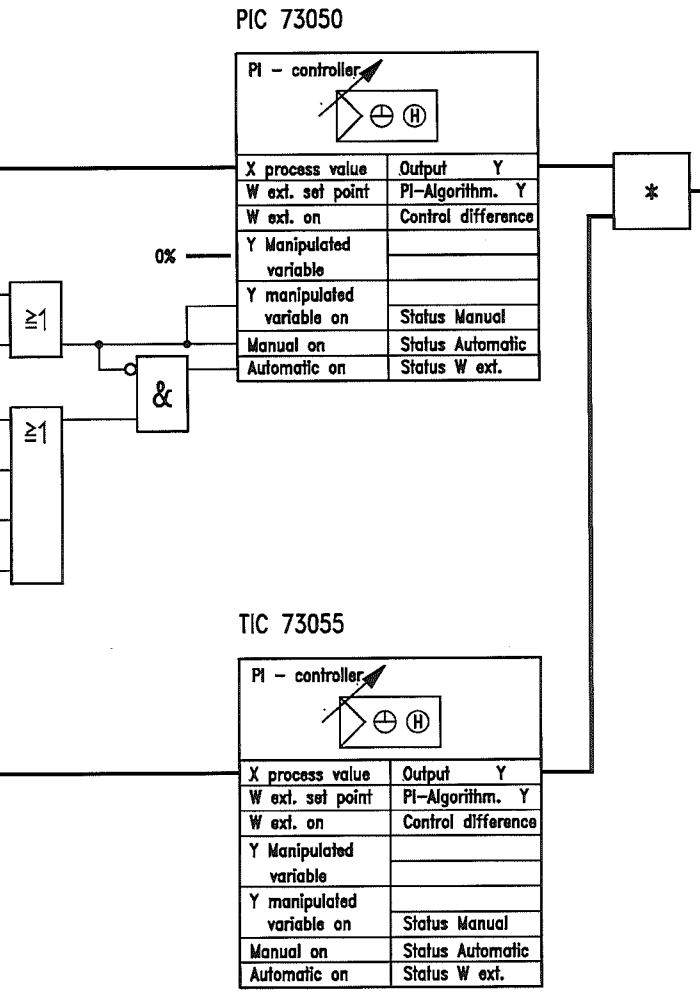

Path	Type	Signal/TAG-No.	Destination	Comment
61	E	UV 73010	Positioner 0-100%	Liquid control valve
62			= 4-20mA	UV 73010

JOB NO.	FILE NO.	REV.	DATE	REVISIONS	BY	CHKD.

PROJECT NAME: ASU KOSICE

PLANT PART: TANK FARM

AIR LIQUIDE

Air Liquide AGS GmbH
Fütingsweg 34
47805 Krefeld

DRAWING NAME:
TANK STORAGE LIN PUMPS
P731001 / P73201
GAN CONTROL PIC73050/TIC73055

SIZE A3 — FUNKTION DIAGRAM

DATE 26.11.2004
AUTHOR Frohn
CHECK Eichler
STD.

DRWG. NO.

PROJ. NO. K70101

REPLACES: REPLACED BY: BASED:

Rang.	Comment	Origin	Type	Signal-/TAG-No.	Path
					1
					2
					3
					4
					5
					6
					7
					8
					9
	Reset trip LIN-pump	Software reset button	1	HS 73201_Res	10
	P73201				11
					12
					13
					14
					15
					16
	GAN temp. trip	Value < Min2	1	TLL 73050	17
					18
					19
	GAN temp. trip	Value < Min2	1	TLL 73051	20
					21
					22
	Fail LIN pump	from page no.141/88	1	HS 73201_fail	23
					24
	Bearing temp.	Value < Min2	1	TLL 73240	25
	Motor bearing	Value < Min2	1	TLL 73241	26
	Bearing temp.	Value > Max2	1	THH 73240	27
	Motor bearing	Value > Max2	1	THH 73241	28
	Electric fail	Contact	0	EL 73201	29
	frquency converter				30
					31
	Emergency shut down	Contact ESD-relay	0	HZ 72009	32
					33
	Press. outlet pump	Value > Max2	1	PHH 73250	34
					35
					36
	Level vaporizer	Level switch < Min	0	LL 73030	37
					38
	Water bath vaporizer	Value < Min	1	TL 73031	39
	water bath vaporizer	Value < Min	1	TL 73032	40
					41
	GAN beh. vaporizer	Value > Max	1	PHH 73050	42
					43
	Level LP-tank	Value < Min2	1	LLL 72005	44
	B72001				45
	Pressure LP-tank	Value < Min1	1	PL 72005	46
	B72001				47
					48

Function

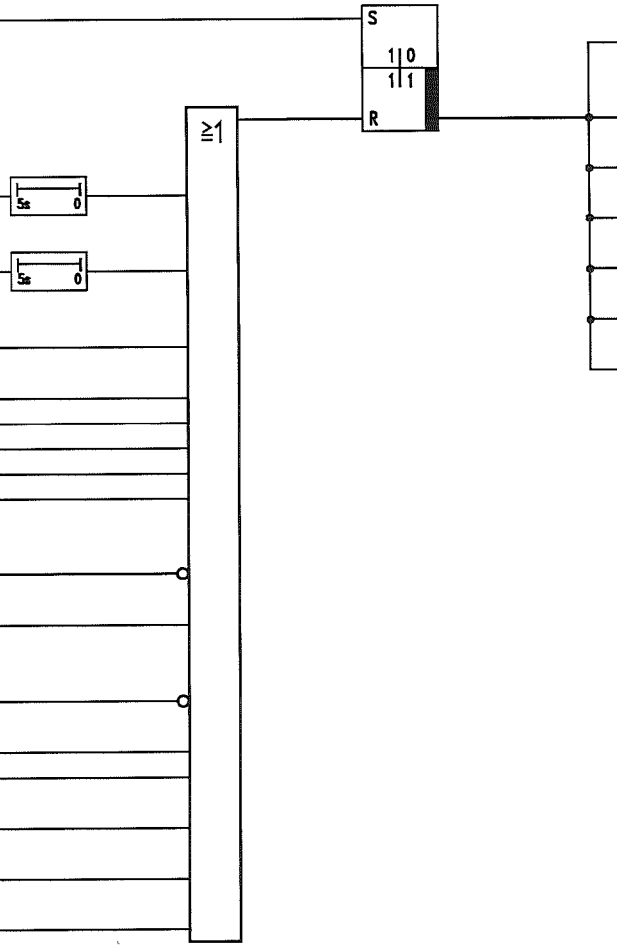

Path	Type	Signal/TAG-No.	Destination	Comment	Rang.
51					
52					
53					
54					
55					
56					
57					
58					
59					
60					
61	1	UA 73201	Alarm OS	"Trip LIN-pump P73201"	
62					
63					
64	1	US 73201	to page no.127/16	Trip P73201	
65					
66	1	US 73201	to page no.138/17		
67					
68	1	US 73201	to page no.139/39		
69					
70	1	US 73201	to page no.142/40		
71					
72	1	US 73201	to page no.143/27		
73					
74	1	US 73201	to page no.125/15		
75					
76					
77					
78					
79					
80					
81					
82					
83					
84					
85					
86					
87					
88					
89					
90					
91					
92					
93					
94					
95					
96					
97					
98					

JOB NO.	FILE NO.	REV.	DATE	REVISIONS	BY	CHKD.

PROJECT NAME: ASU KOSICE

PLANT PART: TANK FARM

AIR LIQUIDE

Air Liquide AGS GmbH
Fütingsweg 34
47805 Krefeld

DRAWING NAME:
TANK STORAGE, LIN PUMP P73201
TRIP US 73201

SIZE: A3

FUNKTION DIAGRAM

DRWG. NO.:

PROJ. NO.: K70101

REPLACES: REPLACED BY:

DATE: 26.11.2004
AUTHOR: Frohn
CHECK: Eichler
STD.:

BASED:

Comment	Origin	Type	Signal-/TAG-No.	Path
Sequence on/off	Software button OS	1	HS 73201	14
Trip P73201	from page no.126/64	1	US 73201	16
Bottom valve open	End position switch	1	ZH 72009	18
Steam pressure	Value < Min	1	PL 73080	22
Bearing temp.	Value < Min1	1	TL 73240	24
Motor bearing	Value < Min1	1	TL 73241	26
Bearing temp.	Value > Max1	1	TH 73240	28
Motor bearing	Value > Max1	1	TH 73241	30

Function

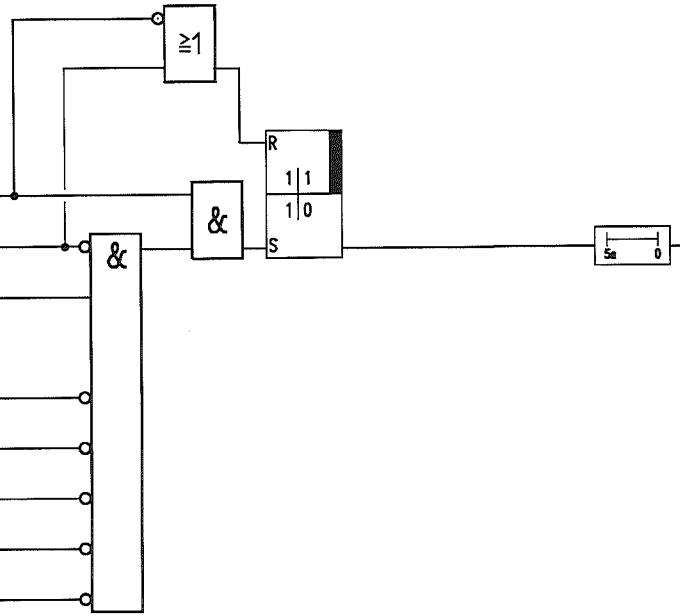

Path	Type	Signal/TAG-No.	Destination	Comment
62	1	P73201_Start_ok	Monitoring OS	Enabling after start
66	1	P73201_Start_ok	to page no.130/6	
68	1	P73201_Start_ok	to page no.131/14	
70	1	P73201_Start_ok	to page no.132/14	
72	1	P73201_Start_ok	to page no.133/8	
74	1	P73201_Start_ok	to page no.134/14	
76	1	P73201_Start_ok	to page no.135/14	
78	1	P73201_Start_ok	to page no.136/14	
80	1	P73201_Start_ok	to page no.137/28	

JOB NO.	FILE NO	REV.	DATE	REVISIONS	BY	CHKD.

PROJECT NAME: ASU KOSICE

PLANT PART: TANK FARM

AIR LIQUIDE

Air Liquide AGS GmbH
Fütingsweg 34
47805 Krefeld

DRAWING NAME: TANK STORAGE LIN PUMP P73201 SEQUENCE START / STOP

SIZE: A3

FUNKTION DIAGRAM

DRWG. NO.:

PROJ. NO.: K70101

REPLACES: REPLACED BY: BASED:

DATE: 26.11.2004
AUTHOR: Frohn
CHECK: Eichler
STD.:

Comment	Origin	Type	Signal-/TAG-No.	Path

Function

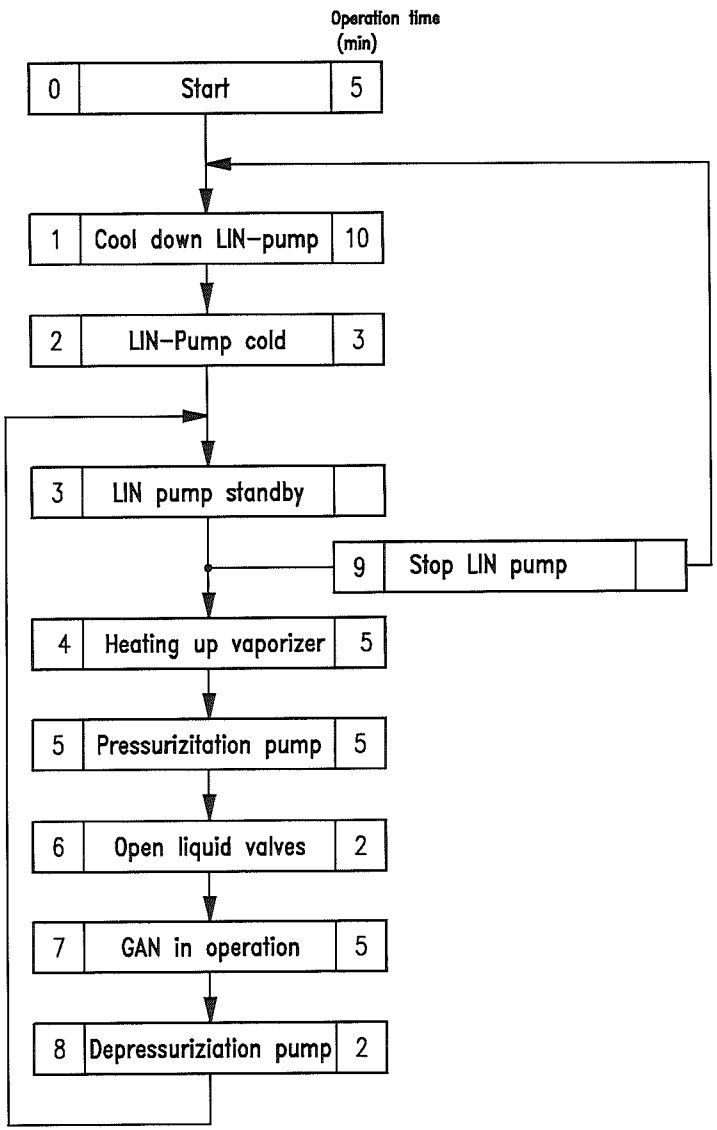

Path	Type	Signal/TAG-No.	Destination	Comment

JOB NO.	FILE NO	REV.	DATE	REVISIONS	BY	CHKD.

PROJECT NAME: ASU KOSICE

PLANT PART: TANK FARM

AIR LIQUIDE

Air Liquide AGS GmbH
Fütingsweg 34
47805 Krefeld

DRAWING NAME:
TANK STORAGE LIN PUMP P73201
ALL STEPS OF THE LIN PUMP SEQUENCE CONTROL

SIZE A3 — FUNKTION DIAGRAM

DRWG. NO.

PROJ. NO. K70101

REPLACES: REPLACED BY: BASED:

DATE 26.11.2004
AUTHOR Frohn
CHECK Eichler
STD.

Comment	Origin	Type	Signal-/TAG-No.	Path
				1
				2
				3
				4
				5
				6
				7
				8
				9
				10
				11
				12
				13
				14
				15
				16
				17
				18
				19
				20
				21
				22
				23
				24
				25
				26
				27
				28
				29
				30
				31
				32
				33
				34
				35
				36
				37
				38
				39
				40
				41
				42
				43
				44
				45
				46
				47

Function

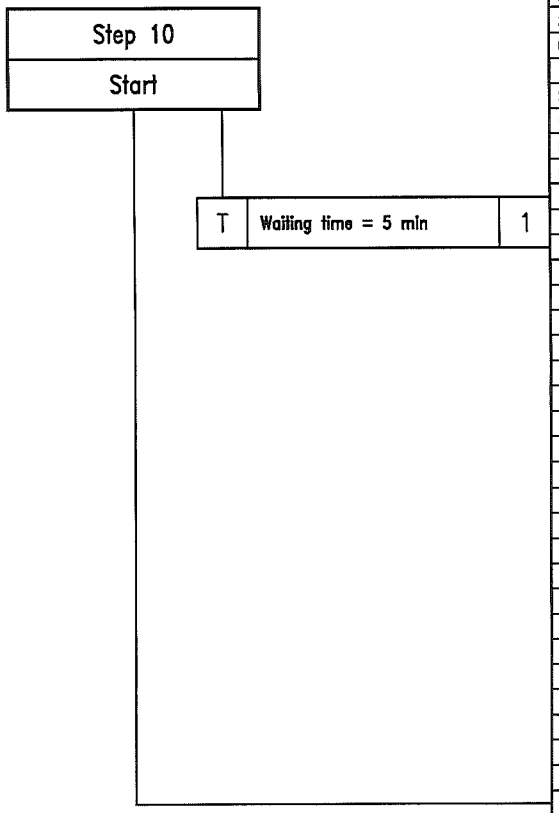

Path	Type	Signal/TAG-No.	Destination	Comment
51				
52				
53				
54				
55				
56				
57				
58				
59				
60				
61				
62				
63				
64				
65				
66				
67	1	Waitingtime10	to page no. 130/4	Time over initial position
68				
69				
70				
71				
72				
73				
74				
75				
76				
77				
78				
79				
80				
81				
82				
83				
84				
85				
86				
87				
88				
89				
90	1	Step10	to page no. 130/2	Initial position
91				
92				
93				
94				
95				
96				
97				
98				

JOB NO.	FILE NO	REV.	DATE	REVISIONS	BY	CHKD.

PROJECT NAME: ASU KOSICE

PLANT PART: TANK FARM

AIR LIQUIDE

Air Liquide AGS GmbH
Fütingsweg 34
47805 Krefeld

DRAWING NAME:
TANK STORAGE LIN PUMP P73201
NEW START OF THE SEQUENCE, ALL VALVES AT START POSITION

SIZE: A3

FUNKTION DIAGRAM

DRWG. NO.:

PROJ. NO.: K70101

REPLACES: REPLACED BY: BASED:

DATE: 26.11.2004
AUTHOR: Frohn
CHECK: Eichler
STD.:

Comment	Origin	Type	Signal-/TAG-No.	Path
				1
Initial position	from page no.129/90	1	Step10	2
				3
Time over	from page no.129/67	1	Waitingtime10	4
				5
Enabling after start	from page no.127/66	1	P73201_Start_ok	6
				7
LIN pump off	Check back signal	0	EH 73201	8
				9
Liquid valve closed	from page no.144/63	0	HS 73250	10
				11
Start cool down pump	Software button OS	1	HS 73230_CD	12
				13
				14
				15
				16
				17
				18
Stop LIN pump	from page no.138/97	1	Step19	19
				20
				21
				22
				23
				24
				25
				26
				27
				28
				29
				30
				31
				32
				33
				34
				35
				36
				37
				38
				39
				40
				41
				42
				43
				44
				45
				46
				47
				48

Function

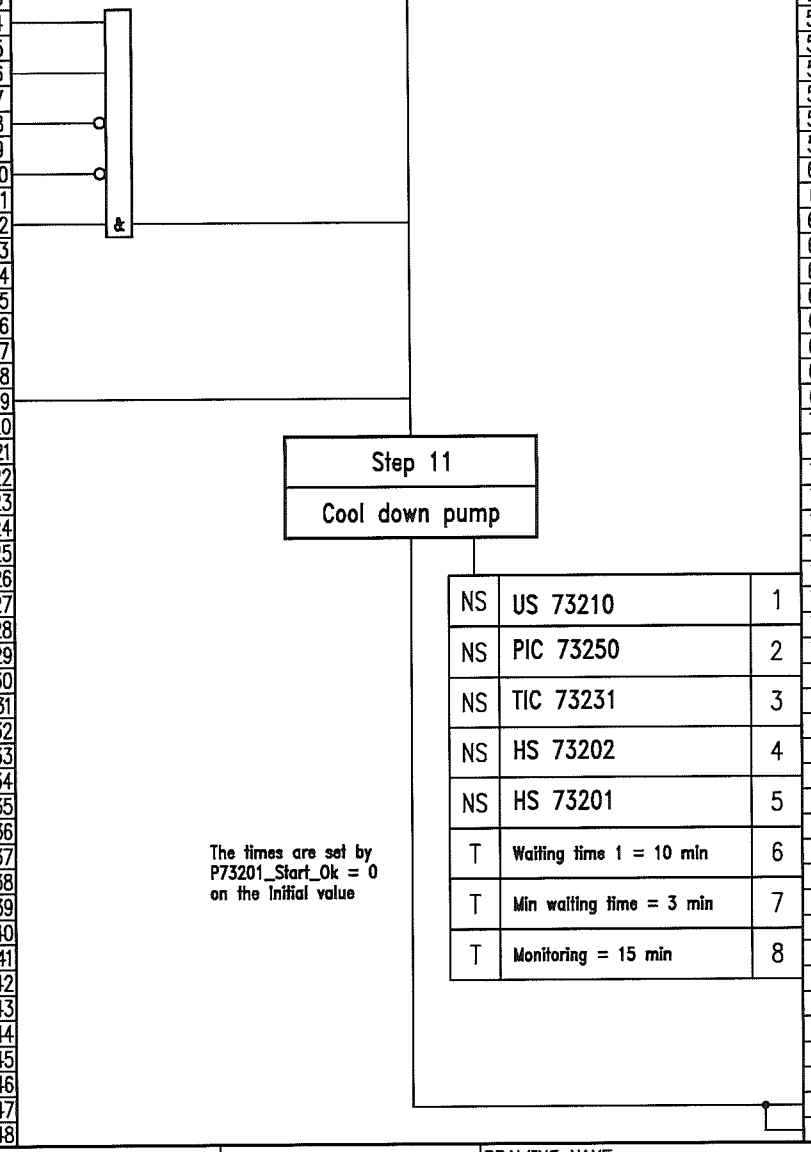

Path	Type	Signal/TAG-No.	Destination	Comment
51				
52				
53				
54				
55				
56				
57				
58				
59				
60				
61				
62				
63				
64				
65				
66				
67				
68				
69				
70				
71				
72				
73				
74				
75				
76				
77	1	Step11_US73210	to page no. 139/7	Open valve HV73210
78				
79	1	Step11_H73270_R10	to page no. 140/2	Open HV73270 from
80				10% over ramp
81	1	Step11_T73231_W1	to page no. 123/29	Set point W = 30°C
82				
83	1	Step11_H73202	to page no. 142/10	Frequency converter
84				fan on
85	1	Stepp11_H73201_N1	to page no. 143/21	Frequency converter
86				on 1000 rpm
87	1	Waitingtime11	to page no. 131/4	Time over
88				
89	1	Minwaitingtime11	to page no. 131/8	Time over
90				
91	1	KC73201_TÜ11	Alarm OS	"Check time over"
92				
93				
94				
95				
96				
97	1	Step11	to page no. 131/2;	Cool down pump
98			141/12	

JOB NO.	FILE NO.	REV.	DATE	REVISIONS	BY	CHKD.

PROJECT NAME: ASU KOSICE

PLANT PART: TANK FARM

AIR LIQUIDE

Air Liquide AGS GmbH
Fütingsweg 34
47805 Krefeld

DRAWING NAME:
TANK STORAGE LIN PUMP P73201
COOL DOWN PUMP

SIZE A3 — FUNKTION DIAGRAM

DRWG. NO.

PROJ. NO. K70101

REPLACES: REPLACED BY: BASED:

DATE 26.11.2004
AUTHOR Frohn
CHECK Eichler
STD.

Comment	Origin	Type	Signal-/TAG-No.	Path
Cool down pump	from page no.130/97	1	Step11	2
Time over	from page no.130/87	1	Waitingtime11	4
Next step	Software push button	1	HS 73201_1	6
Time over	from page no.130/89	1	Minwaitingtime11	8
Cool down temp.	Value < Min	1	TL 73230	10
Stop sequence	Software button OS	1	HS 73201_2	12
Enabling after start	from page no.127/68	1	P73201_Start_ok	14
HV 73210 open	from page no.139/75	1	HS 64210	18
HV 73270 open	Y > 50%	1	H 73270_50	20
Liquid valve closed	from page no.144/61	0	HS 73250	22

Function

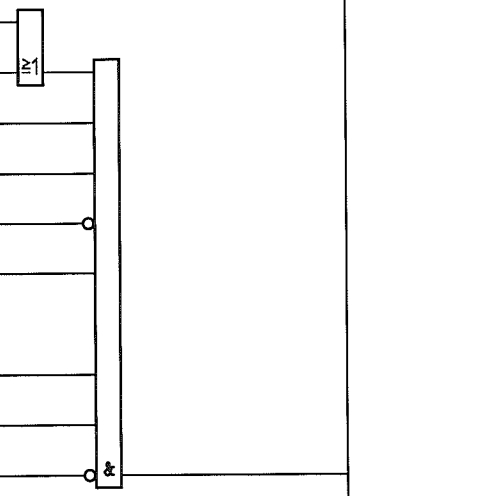

Step 12

HP pump ist cold

NS	US 73210	1
NS	PIC 73250	2
NS	HS 73202	3
NS	HS 73201	4
NS	TIC 73031	5
T	Waiting time = 10 min	6
T	Min waiting time = 3 min	7
T	Monitoring = 15 min	8

The times are set by P73201_Start_Ok = 0 on the initial value

Path	Type	Signal/TAG-No.	Destination	Comment
80	1	Step12_HS73210	to page no.139/9	Open valve HV73210
82	1	Step12_H73270_RC50	to page no.140/12	Close valve HV73270 down to 50% over ramp
84	1	Step12_H73202	to page no. 142/12	Frequency converter fan on
86	1	Step12_H73201_N1	to page no. 143/23	Frequency converter on 1000 rpm
88	1	Step12_T73131_W1	to page no.123/31	Set point W = 30°C
90	1	Waitingtime12	to page no.132/4	time over
92	1	Minwaitingtime12	to page no.132/8	time over
94	1	KC73201_T012	Alarm OS	"Check time error"
97	1	Step12	to page no. 132/2; 141/14	HP LIN pump is cold

JOB NO.	FILE NO.	REV.	DATE	REVISIONS	BY	CHKD.

PROJECT NAME: ASU KOSICE

PLANT PART: TANK FARM

AIR LIQUIDE

Air Liquide AGS GmbH
Fütingsweg 34
47805 Krefeld

DRAWING NAME: TANK STORAGE LIN PUMP P73201 PUMP COLD

SIZE: A3 — FUNKTION DIAGRAM

DRWG. NO.:

PROJ. NO.: K70101

REPLACES: REPLACED BY: BASED:

DATE: 26.11.2004
AUTHOR: Frohn
CHECK: Eichler
STD.:

Comment	Origin	Type	Signal-/TAG-No.	Path
Pump is cold	from page no.131/97	1	Step12	2
Time over	from page no.131/90	1	Waitingtime12	4
Next step	Software push button	1	HS 73201_1	6
Time over	from page no.131/92	1	Minwaitingtime12	8
Cool down temp.	Value < Min	1	TL 73230	10
Stop sequence	Software button OS	1	HS 73201_2	12
Enabling after start	from page no.127/70	1	P73201_Start_ok	14
HP LIN pump on	Check back signal	1	EH 73201	16
HV 73210 open	from page no.139/73	1	HS 73210	18
HV 64270 open	Y > 40%	1	H 73270_40	20
Liquid valve closed	from page no.144/59	0	HS 73250	22
time over	from page no.137/90	1	Waitingtime18	30
Next step	Software push button	1	HS 73201_1	32
time over	from page no.137/92	1	Minwaitingtime18	34
Pressure LIN pump	Value > Max1	1	PH 73250	36
Breaking off emergency supply	from page no.137/97	1	Step18	38

Function

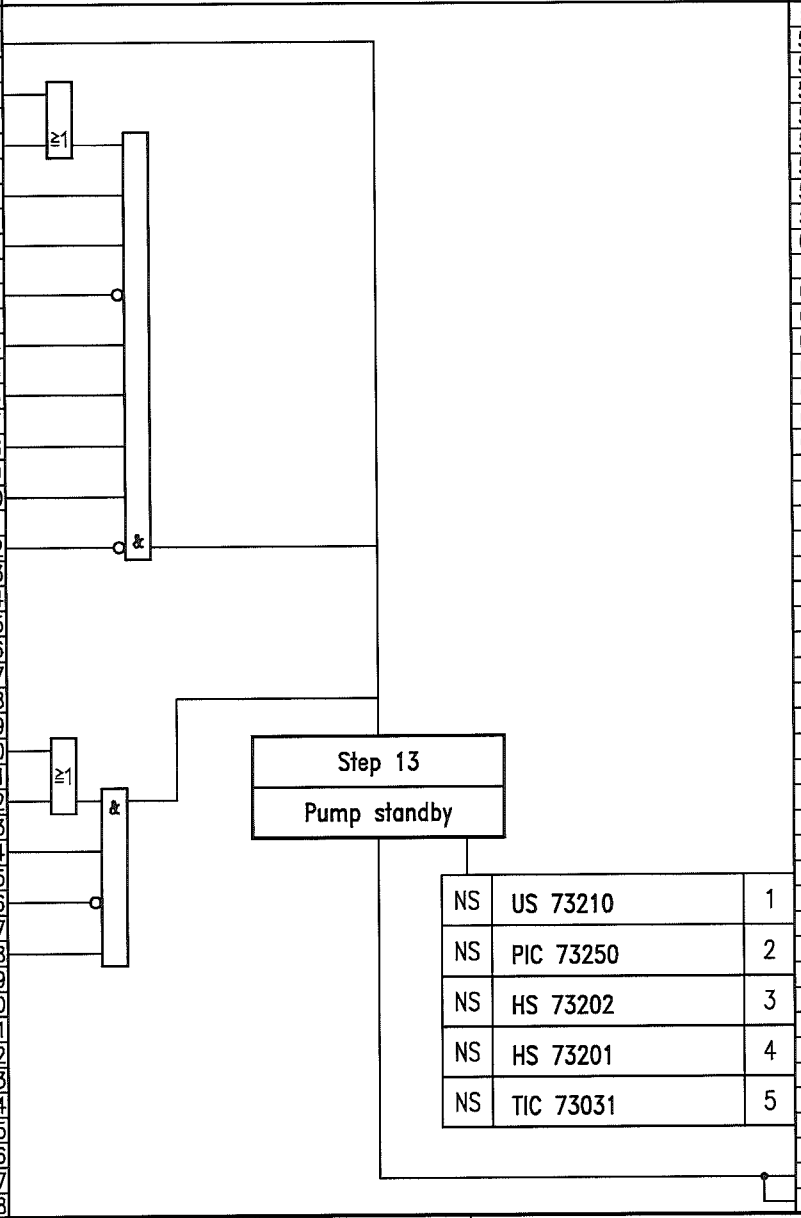

NS	US 73210	1
NS	PIC 73250	2
NS	HS 73202	3
NS	HS 73201	4
NS	TIC 73031	5

Path	Type	Signal/TAG-No.	Destination	Comment
86	1	Step13_HS73210	to page no.139/11	Open valve HV73210
88	1	Step13_H73270_STP	to page no.140/22	Valve HCV73270 stop
90	1	Step13_H73202	to page no.142/14	Frequency converter fan on
92	1	Step13_H73201_N1	to page no.143/25	Frequency converter on 1000 rpm
94	1	Step13_T73031_W1	to page no. 33/33	Set point W = 30°C
97	1	Step13	to page no. 133/2	HP LIN pump standby
98	1		to page no.138/2; 141/16	

JOB NO.	FILE NO.	REV.	DATE	REVISIONS	BY	CHKD.

PROJECT NAME: ASU KOSICE

PLANT PART: TANK FARM

AIR LIQUIDE

Air Liquide AGS GmbH
Fittingsweg 34
47805 Krefeld

DRAWING NAME: TANK STORAGE LIN PUMP P73201 PUMP STANDBY

SIZE: A3

FUNKTION DIAGRAM

DRWG. NO.:

PROJ. NO.: K70101

REPLACES: REPLACED BY: BASED:

DATE: 26.11.2004
AUTHOR: Frohn
CHECK: Eichler
STD.:

Page no. 132 OF 160 Pages

Function

Path	Comment	Origin	Type	Signal-/TAG-No.
1				
2	HP LIN Pump standby	from page no.132/97	1	Step13
3				
4	Cool down temp.	Value < Min	1	TL 73230
5				
6	Stop sequence	Software button OS	1	HS 73201_2
7				
8	Enabling after start	from page no.137/72	1	P73201_Start_ok
9				
10	HP LIN pump on	Check back signal	1	EH 73201
11				
12	HV 73210 open	from page no.139/71	1	HS 73210
13				
14	HV 73270 open	Y > 40%	1	H 73270_40
15				
16	Liquid valve closed	from page no.144/57	0	HS 73250
17				
18	Start emergency supply	Software push button	1	HS 73201_1
19				
20				
21				
22				
23				
24				
25				
26				
27				
28				
29				
30				
31				
32				
33				
34				
35				
36				
37				
38				
39				
40				
41				
42				
43				
44				
45				
46				
47				
48				

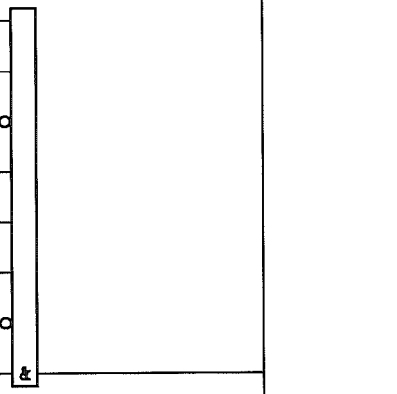

Step 14

Heating up vaporizer

NS	US 73210	1
NS	PIC 73250	2
NS	HS 73202	3
NS	HS 73201	4
NS	TIC 73031	5
T	Waiting time = 5 min	6
T	Min waiting time = 1 min	7
T	Monitoring = 8 min	8

The times are set by P73202_Start_Ok = 0 on the Initial value

Path	Type	Signal/TAG-No.	Destination	Comment
51				
52				
53				
54				
55				
56				
57				
58				
59				
60				
61				
62				
63				
64				
65				
66				
67				
68				
69				
70				
71				
72				
73				
74				
75				
76				
77				
78				
79				
80	1	Step14_HS73210	to page no.139/13	Open valve HV73210
81				
82	1	Step14_H73270_STP	to page no.140/23	Valve HV73270 stop
83				
84	1	Step14_H73202	to page no.142/16	Frequency converter
85				fan on
86	1	Step14_H73201_N1	to page no. 142/27	Frequency converter
87				on 1000 rpm
88	1	Step14_T73031_W2	to page no. 123/3	Set point W = 60°C
89				
90	1	Waitingtime14	to page no.134/4	time over
91				
92	1	Minwaitingtime14	to page no.134/8	time over
93				
94	1	KC73201_T014	Alarm OS	"Check time error"
95				
96				
97	1	Step14	to page no.134/2;	Heating up vaporizer
98	1		141/18	

JOB NO.	FILE NO	REV.	DATE	REVISIONS	BY	CHKD.

PROJECT NAME: ASU KOSICE

PLANT PART: TANK FARM

AIR LIQUIDE

Air Liquide AGS GmbH
Fütingsweg 34
47805 Krefeld

DRAWING NAME:
TANK STORAGE LIN PUMP P73201
START EMERGENCY SUPPLY
HEATING UP VAPORIZER

SIZE: A3

FUNKTION DIAGRAM

DRWG. NO.:

PROJ. NO.: K70101

REPLACES: REPLACED BY: BASED:

DATE: 26.11.2004
AUTHOR: Frohn
CHECK: Eichler
STD.:

Path	Comment	Origin	Type	Signal-/TAG-No.
2	Heating up vaporizer	from page no.133/97	1	Step14
4	Time over	from page no.133/90	1	Waitingtime14
6	Next step	Software push button	1	HS 73201_1
8	Time over	from page no.133/92	1	Minwaitingtime14
10	Liquid valve closed	from page no.144/55	0	HS 73250
12	Stop sequence	Software button OS	1	HS 73201_2
14	Enabling after start	from page no.127/74	1	P73201_Start_ok
16	HP LIN pump on	Check back signal	1	EH 73201
18	HV 73210 open	from page no.139/69	1	HS 73210
20	Temp. vaporizer	Value > Max1	1	TH 73032

Function

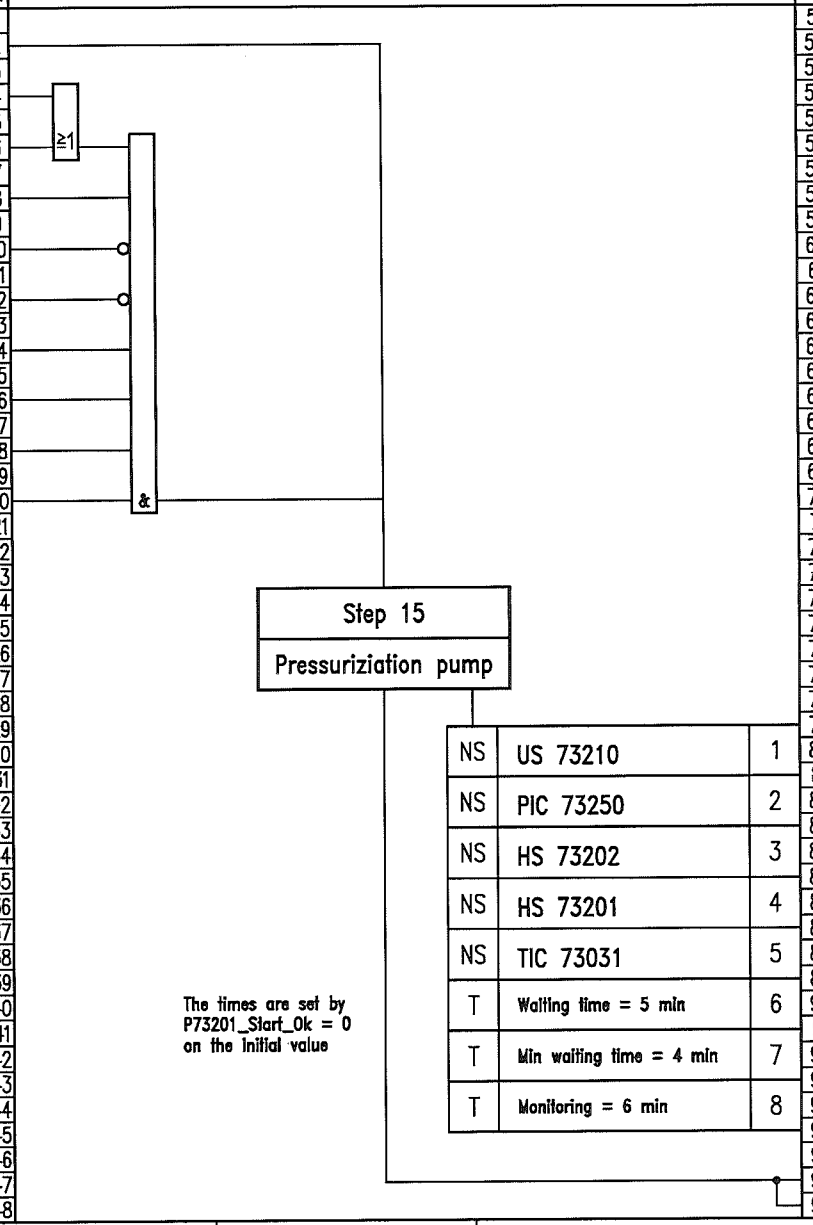

NS	US 73210	1
NS	PIC 73250	2
NS	HS 73202	3
NS	HS 73201	4
NS	TIC 73031	5
T	Waiting time = 5 min	6
T	Min waiting time = 4 min	7
T	Monitoring = 6 min	8

Path	Type	Signal/TAG-No.	Destination	Comment
80	1	Step15_HS73210	to page no.139/15	Open valve HV73210
82	1	Step15_H73270_RC	to page no.140/25	Close valve HV73270
				over ramp
84	1	Step15_H73202	to page no.142/18	Frequency converter
				fan on
86	1	Step15_H73201_N2	to page no.143/29	Frequency converter
				automatic
88	1	Step15_T73031_W2	to page no.123/5	Set point W = 60°C
90	1	Waitingtime15	to page no. 135/4	time over
92	1	Minwaitingtime15	to page no. 135/8	time over
94	1	KC73201_TÜ15	Alarm OS	"Check time error"
97	1	Step15	to page no. 135/2; 141/20	Pressuriziation pump
98	1			

JOB NO.	FILE NO	REV.	DATE	REVISIONS	BY	CHKD.

PROJECT NAME: ASU KOSICE

PLANT PART: TANK FARM

AIR LIQUIDE

Air Liquide AGS GmbH
Fittingsweg 34
47805 Krefeld

DRAWING NAME: TANK STORAGE LIN PUMP P73201 PRESSURIZIATION PUMP

SIZE: A3 — FUNKTION DIAGRAM

DRWG. NO.:

PROJ. NO.: K70101

REPLACES: REPLACED BY: BASED:

DATE: 26.11.2004
AUTHOR: Frohn
CHECK: Eichler
STD.:

Comment	Origin	Type	Signal-/TAG-No.	Path
				1
Pressuriziation pump	from page no.134/97	1	Step15	2
				3
Time over	from page no.134/90	1	Waitingtime15	4
				5
Next step	Software push button	1	HS 73201_1	6
				7
Time over	from page no.134/92	1	Minwaitingtime15	8
				9
Liquid valve closed	from page no.144/52	0	HS 73250	10
				11
Stop sequence	Software button OS	1	HS 73201_2	12
				13
Enabling after start	from page no.127/76	1	P73201_Start_ok	14
				15
HP LIN pump on	Check back signal	1	EH 73201	16
				17
HV 73210 open	from page no.139/67	1	HS 73210	18
				19
Pressure HP pump	Value > Max1	1	PH 73250	20

Function

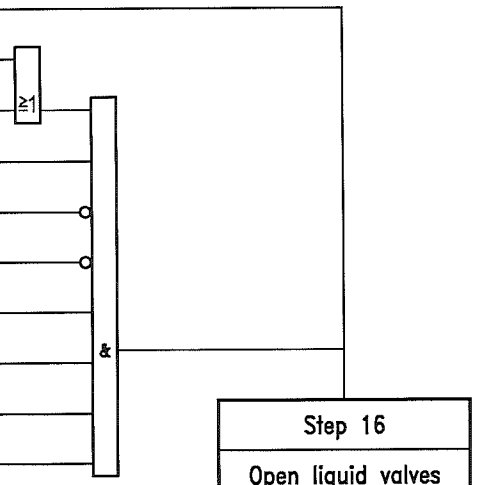

Step 16

Open liquid valves

NS	US 73210	1
NS	PIC 73250	2
NS	HS 73202	3
NS	HS 73201	4
NS	TIC 73031	5
NS	HS 73250	6
NS	Spare	7
NS	PIC 73050	8
T	Waiting time = 2 min	9
T	Min waiting time = 1 min	10
T	Monitoring = 3 min	11

The times are set by P73201_Start_Ok = 0 on the initial value

Path	Type	Signal/TAG-No.	Destination	Comment
51				
52				
53				
54				
55				
56				
57				
58				
59				
60				
61				
62				
63				
64				
65				
66				
67				
68				
69				
70				
71				
72				
73				
74	1	Step16_HS73210	to page no.139/17	Open valve HV73210
75				
76	1	Step16_H73270_RC	to page no.140/26	Close valve HV73270
77				over ramp
78	1	Step16_H73202	to page no.142/20	Frequency converter
79				fan on
80	1	Step16_H73201_N2	to page no.142/31	Frequency converter
81				on automatic
82	1	Step16_T73031_W2	to page no.123/7	Set point W = 60°C
83				
84	1	Step16_HS73250	to page no.144/9	Open valve HV73250
85				
86				
87				
88	1	Step16_PC73050	to page no.125/24	Enable pressure controller
89				W = 22 bar
90	1	Waitingtime16	to page no.136/4	time over
91				
92	1	Minwaitingtime16	to page no.136/8	time over
93				
94	1	KC73201_TÜ16	Alarm OS	"Check time error"
95				
96				
97	1	Step16	to page no.136/2;	Open liquid valves
98	1		141/22	

JOB NO.	FILE NO.	REV.	DATE	REVISIONS	BY	CHKD.

PROJECT NAME: ASU KOSICE

PLANT PART: TANK FARM

AIR LIQUIDE

Air Liquide AGS GmbH
Fütingsweg 34
47805 Krefeld

DRAWING NAME: TANK STORAGE LIN PUMP P73201 OPEN LIQUID VALVES

SIZE: A3

FUNKTION DIAGRAM

DRWG. NO.:

PROJ. NO.: K70101

REPLACES: REPLACED BY: BASED:

DATE: 26.11.2004
AUTHOR: Frohn
CHECK: Eichler
STD.:

Comment	Origin	Type	Signal-/TAG-No.	Path
				1
Open liquid valves	from page no.135/97	1	Step16	2
				3
Time over	from page no.135/90	1	Waitingtime16	4
				5
Next step	Software push button	1	HS 73201_1	6
				7
Time over	from page no.135/92	1	Minwaitingtime16	8
				9
Liquid valve open	from page no.144/65	1	HS 73250	10
				11
Stop sequence	Software button OS	1	HS 73201_2	12
				13
Enabling after start	from page no.127/78	1	P73201_Start_ok	14
				15
HP LIN pump on	Check back signal	1	EH 73201	16
				17
HV 73210 open	from page no.139/65	1	HS 73210	18
				19
HV 73270 closed	Y < 1%	1	HC 73270_0	20
				21
				22
				23
				24
				25
				26
				27
				28
				29
				30
				31
				32
				33
				34
				35
				36
				37
				38
				39
				40
				41
				42
				43
				44
				45
				46
				47
				48

Function

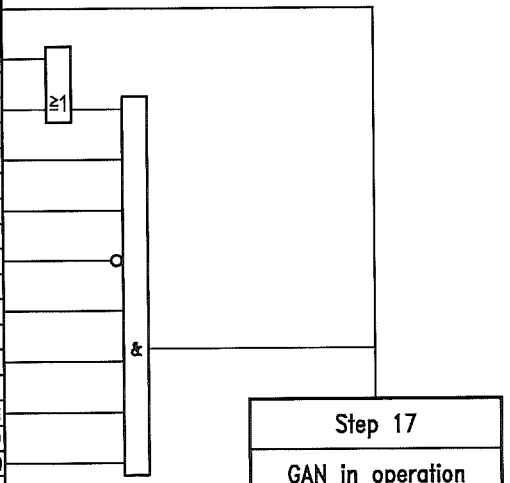

Step 17

GAN in operation

NS	US 73210	1
NS	PIC 73250	2
NS	HS 73202	3
NS	HS 73201	4
NS	TIC 73031	5
NS	HS 73250	6
NS	PIC 73158	7
NS	PIC 73050	8
T	Waiting time = 5 min	9

The times are set by P73201_Start_Ok = 0 on the initial value

Path	Type	Signal/TAG-No.	Destination	Comment
51				
52				
53				
54				
55				
56				
57				
58				
59				
60				
61				
62				
63				
64				
65				
66				
67				
68				
69				
70				
71				
72				
73				
74	1	Step17_HS73210	to page no.139/19	Open valve HV73210
75				
76	1	Step17_H73270_RC	to page no.140/36	Close valve HV64270
77				over ramp
78	1	Step17_H73202	to page no.142/22	Frequency converter
79				fan on
80	1	Step17_H73201_N2	to page no.143/33	Frequency converter
81				on automatic
82	1	Step17_T73031_W2	to page no.123/9	Set point W = 60°C
83				
84	1	Step17_HS73250	to page no.144/11	Open valve HV73250
85				
86	1	Step17_PC73136	to page no.145/26	Enable pressure controller
87				W = 22 bar
88	1	Step17_PC73050	to page no.125/22	Enable pressure controller
89				W = 22 bar
90	1	Waitingtime17	to page no.137/20	Time over
91				
92				
93				
94				
95				
96				
97	1	Step17	to page no.137/2;	GAN in operation
98	1		141/26	

JOB NO.	FILE NO	REV.	DATE	REVISIONS	BY	CHKD.

PROJECT NAME: ASU KOSICE

PLANT PART: TANK FARM

AIR LIQUIDE

Air Liquide AGS GmbH
Fütingsweg 34
47805 Krefeld

DRAWING NAME:
TANK STORAGE LIN PUMP P73201
EMERGENCY GAN SUPPLY IN

SIZE: A3

FUNKTION DIAGRAM

DRWG. NO.:

PROJ. NO.: K70101

REPLACES: REPLACED BY: BASED:

DATE: 26.11.2004
AUTHOR: Frohn
CHECK: Eichler
STD.:

Function

Path	Comment	Origin	Type	Signal-/TAG-No.
2	GAN in operation	from page no.136/97	1	Step17
20	Time over	from page no.136/90	1	Waitingtime17
22	Stop emergency supply	Software push button	1	HS 73201_1

&

Step 18

Depressuriziation pump

NS	US 73210	1
NS	PIC 73250	2
NS	HS 73202	3
NS	HS 73201	4
NS	TIC 73031	5
T	Waiting time = 2 min	6
T	Min waiting time = 1 min	7
T	Monitoring = 3 min	8

The times are set by P73201_Start_Ok = 0 on the initial value

Path	Type	Signal/TAG-No.	Destination	Comment
80	1	Step18_HS73210	to page no.139/21	Open valve HV73210
82	1	Step18_H73270_R50	to page no.140/38	Open valve HV73270 to 50% over ramp
84	1	Step18_H73202	to page no.142/24	Frequenzy converter fan on
86	1	Step18_H73201_N1	to page no.143/35	Frequency converter on 1000 rpm
88	1	Step18_T73031_W1	to page no.123/35	Set point W = 30°C
90	1	Waitingtime18	to page no.131/30	time over
92	1	Minwaitingtime18	to page no.131/34	time over
94	1	KC73201_T018	Alarm OS	"Check time error"
97	1	Step18	to page no.131/38 141/24	Depressuriziation pump

JOB NO.	FILE NO.	REV.	DATE	REVISIONS	BY	CHKD.

PROJECT NAME: ASU KOSICE

PLANT PART: TANK FARM

AIR LIQUIDE

Air Liquide AGS GmbH
Fittingsweg 34
47805 Krefeld

DRAWING NAME: TANK STORAGE LIN PUMP P73201
STOP EMERGENCY SUPPLY
DEPRESSURIZIATION PUMP

SIZE: A3 — FUNKTION DIAGRAM

DRWG. NO.:

PROJ. NO.: K70101

REPLACES: REPLACED BY: BASED:

DATE: 26.11.2004
AUTHOR: Frohn
CHECK: Eichler
STD.:

Comment	Origin	Type	Signal-/TAG-No.	Path
				1
LIN pump standby	from page no.132/98	1	Step13	2
				3
				4
				5
				6
				7
				8
				9
				10
				11
				12
				13
				14
Stop LIN pump	Software push button	1	HL 73201	15
				16
Trip P73201	from page no.126/66	1	US 73201	17
				18
				19
				20
				21
				22
				23
				24
				25
				26
				27
				28
				29
				30
				31
				32
				33
				34
				35
				36
				37
				38
				39
				40
				41
				42
				43
				44
				45
				46
				47
				48

Function

≥1

Step 19

Stop LIN pump

Path	Type	Signal/TAG-No.	Destination	Comment
51				
52				
53				
54				
55				
56				
57				
58				
59				
60				
61				
62				
63				
64				
65				
66				
67				
68				
69				
70				
71				
72				
73				
74				
75				
76				
77				
78				
79				
80				
81				
82				
83				
84				
85				
86				
87				
88				
89				
90				
91				
92				
93				
94				
95				
96				
97	1	Step19	to page no.130/19	Stop LIN pump
98				

JOB NO.	FILE NO.	REV.	DATE	REVISIONS	BY	CHKD.

PROJECT NAME: ASU KOSICE

PLANT PART: TANK FARM

AIR LIQUIDE

Air Liquide AGS GmbH
Fütingsweg 34
47805 Krefeld

DRAWING NAME:
TANK STORAGE LIN PUMP P73201
STOP PUMP

SIZE: A3

FUNKTION DIAGRAM

DRWG. NO.:

PROJ. NO.: K70101

REPLACES: REPLACED BY:

DATE: 26.11.2004
AUTHOR: Frohn
CHECK: Eichler
STD.:

BASED:

Comment	Origin	Type	Signal-/TAG-No.	Path
Cool down LIN-pump	from page no.130/77	1	Step11_US73210	7
LIN-pump cold	from page no.131/80	1	Step12_US73210	9
LIN-pump standby	from page no.132/86	1	Step13_US73210	11
Heating up vaporizer	from page no.133/80	1	Step14_US73210	13
Pressuriziation pump	from page no.134/80	1	Step15_US73210	15
Open liquid valves	from page no.135/74	1	Step16_US73210	17
GAN in operation	from page no.136/74	1	Step17_US73210	19
Depressurization	from page no.137/80	1	Step18_US73210	21
Trip LIN-pump	from page no.126/68	1	US 73201	39
LIN-pump off	Check back signal	0	EH 73201	41

Function

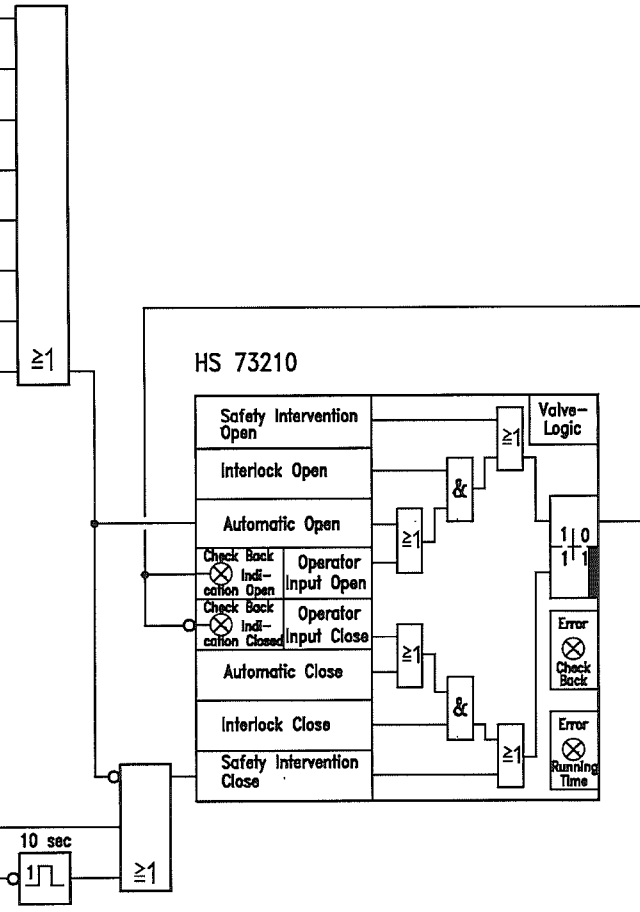

Path	Type	Signal/TAG-No.	Destination	Comment
65	1	US 73210	to page no.136/18	
67	1	US 73210	to page no.135/18	
69	1	US 73210	to page no.134/18	
71	1	US 73210	to page no.133/14	
73	1	US 73210	to page no.132/18	
75	0	US 73210	to page no.131/18	
77	1	UV 73210	Solenoid valve	Open valve HV73210
78				LIN from B72001

JOB NO.	FILE NO.	REV.	DATE	REVISIONS	BY	CHKD.

PROJECT NAME: ASU KOSICE

PLANT PART: TANK FARM

AIR LIQUIDE

Air Liquide AGS GmbH
Fütingsweg 34
47805 Krefeld

DRAWING NAME: TANK STORAGE LIN PUMP P73201
LIN FROM LP-TANK B72001
HS 73210

SIZE: A3

FUNKTION DIAGRAM

DRWG. NO.:

PROJ. NO.: K70101

REPLACES: REPLACED BY: BASED:

DATE: 26.11.2004
AUTHOR: Frohn
CHECK: Eichler
STD.:

Rang.	Text	Herkunft	Typ	Signalbezeichnung	Pfad
					1
	Cool down valve	from page no.130/79	1	Step11_H64270_R10	2
	ramp upwards				3
					4
					5
					6
					7
	Start value	Control value 10%	E		8
					9
					10
					11
	Cool down valve	from page no.131/82	1	Step12_H73270_RC50	12
	downwards to 50%				13
					14
					15
					16
					17
	End value	Control value 50%	E		18
					19
					20
					21
	Cool down valve	from page no.132/88	1	Step13_H73270_STP	22
	ramp stop	from page no.133/84	1	Step14_H73270_STP	23
					24
	Cool down valve	from page no.134/82	1	Step15_H73270_RC	25
	closing over ramp	from page no.135/76	1	Step16_H73270_RC	26
					27
					28
					29
					30
					31
					32
					33
					34
					35
	Cool down valve	from page no.136/76	1	Step17_H73270_CI	36
	closing immediatly				37
	Cool down valve	from page no.137/82	1	Step18_H73270_R50	38
	ramp upwards				39
					40
					41
					42
					43
	End value	Control value 50%	E		44
					45
					46
					47

Verknüpfung

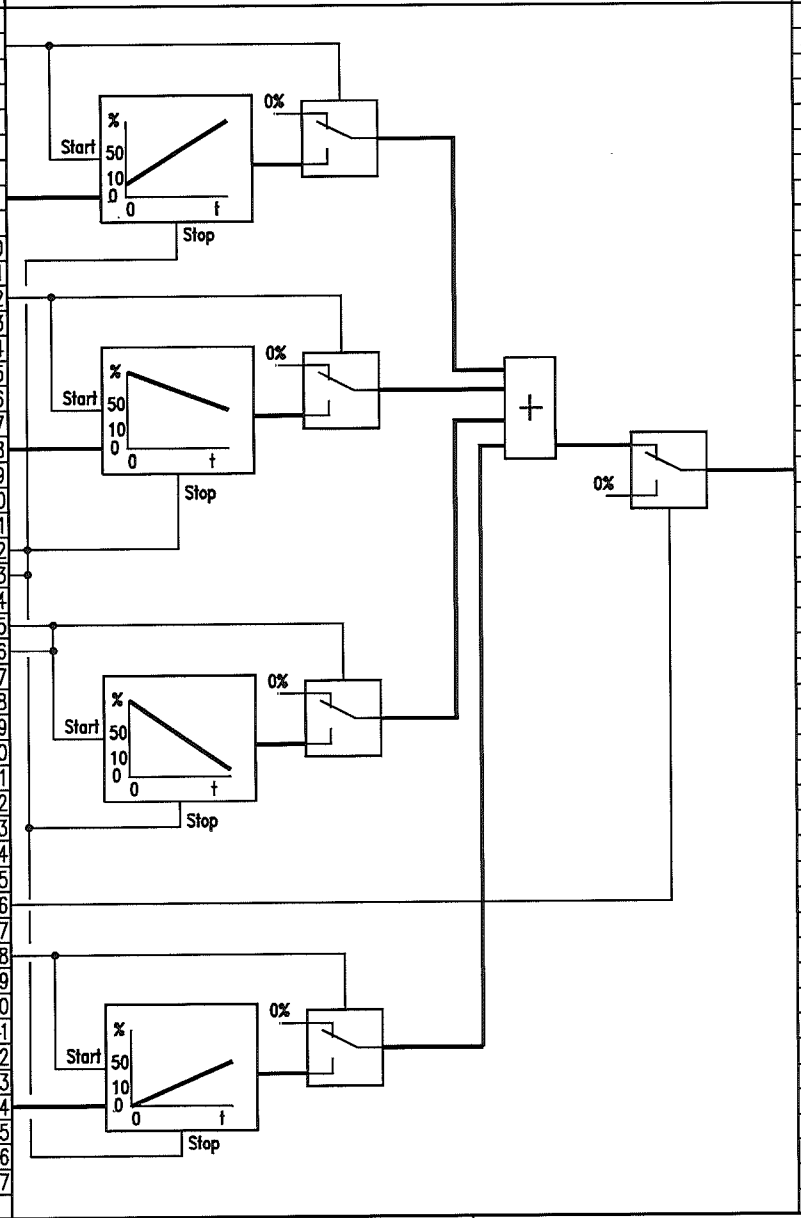

Pfad	Typ	Signalbezeichnung	Verwendung	Text	Rang.
51					
52					
53					
54					
55					
56					
57					
58					
59					
60					
61					
62					
63					
64					
65					
66					
67					
68					
69	E	PC73270_Man	to page no. 141/8	Control value manual	
70					
71					
72					
73					
74					
75					
76					
77					
78					
79					
80					
81					
82					
83					
84					
85					
86					
87					
88					
89					
90					
91					
92					
93					
94					
95					
96					
97					
98					

JOB NO.	FILE NO	REV.	DATE	REVISIONS	BY	CHKD.

PROJECT NAME: ASU KOSICE

PLANT PART: TANK FARM

AIR LIQUIDE

Air Liquide AGS GmbH
Fütingsweg 34
47805 Krefeld

DRAWING NAME:
TANK STORAGE LIN PUMP P73201
COOL DOWN VALVE HIC73270

SIZE: A3

FUNKTION DIAGRAM

DRWG. NO.:

PROJ. NO.: K70101

REPLACES: REPLACED BY: BASED:

DATE: 26.11.2004
AUTHOR: Frohn
CHECK: Eichler
STD.:

Comment	Origin	Type	Signal-/TAG-No.	Path
				1
				2
				3
				4
Discharge P73201	P-transmitter	E	PT 73250	5
				6
				7
Control value manual	from page no.140/69	E	PC73250_Man	8
				9
				10
				11
Cool down pump	from page no.130/98	1	Step11	12
				13
HP pump is cold	from page no.131/98	1	Step12	14
				15
Pump standby	from page no.132/98	1	Step13	16
				17
Heating up vaporizer	from page no.133/98	1	Step14	18
				19
Pressuriziation pump	from page no.134/98	1	Step15	20
				21
Open liquid valves	from page no.135/98	1	Step16	22
				23
Depressuriziation	from page no.137/98	1	Step18	24
				25
GAN in operation	from page no.136/98	1	Step17	26
				27
				28
				29
				30
				31
				32
				33
				34
				35
				36
				37
				38
				39
				40
				41
				42
				43
				44
				45
				46
				47
				48

Function

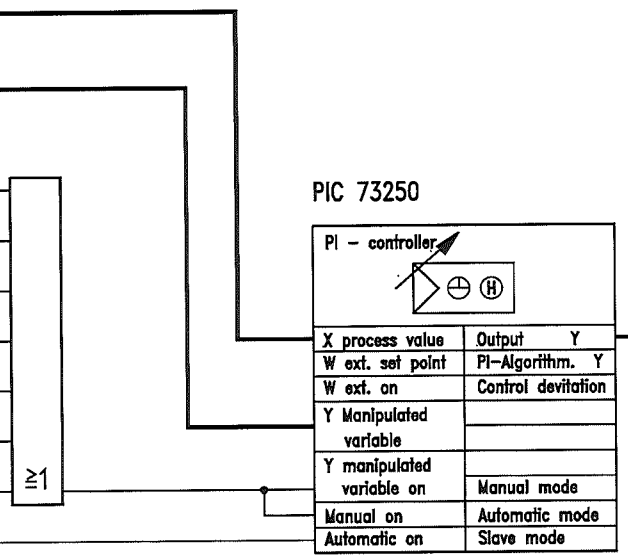

Path	Type	Signal/TAG-No.	Destination	Comment
51				
52				
53				
54				
55				
56				
57				
58				
59				
60				
61				
62				
63				
64				
65				
66				
67				
68	E	HV 64270	Positioner 0-100%	Cool down valve
69			= 4-20mA	HV64270
70				
71				
72				
73				
74				
75				
76				
77				
78				
79				
80				
81				
82				
83				
84				
85				
86				
87				
88				
89				
90				
91				
92				
93				
94				
95				
96				
97				
98				

JOB NO.	FILE NO	REV.	DATE	REVISIONS	BY	CHKD.

PROJECT NAME: ASU KOSICE

PLANT PART: TANK FARM

AIR LIQUIDE

Air Liquide AGS GmbH
Fütingsweg 34
47805 Krefeld

DRAWING NAME:
TANK STORAGE LIN PUMP P73201
PRESSURE CONTROL PIC73250
COOL DOWN VALVE HIC73270

SIZE A3 — FUNKTION DIAGRAM

DRWG. NO.

PROJ. NO. K70101

REPLACES: REPLACED BY: BASED:

DATE 26.11.2004
AUTHOR Frohn
CHECK Eichler
STD.

Comment	Origin	Type	Signal-/TAG-No.	Path
Cool down pump	from page no.128/83	1	Step11_HS73202	10
HP pump is cold	from page no.129/84	1	Step12_HS73202	12
HP Pump standby	from page no.130/90	1	Step13_HS73202	14
Heating up vaporizer	from page no.131/84	1	Step14_HS73202	16
Pressuriziation pump	from page no.132/84	1	Step15_HS73202	18
Open liquid valves	from page no.133/78	1	Step16_HS73202	20
GAN in operation	from page no.134/78	1	Step17_HS73202	22
Depressuriziation	from page no.135/84	1	Step18_HS73202	24
Ready to start	from page no.127/80	1	P73201_Start_Ok	28
LIN-pump on	Check back signal	1	EH 73201	32
Trip LIN-Pump	from page no.126/70	1	US 73201	40

Function

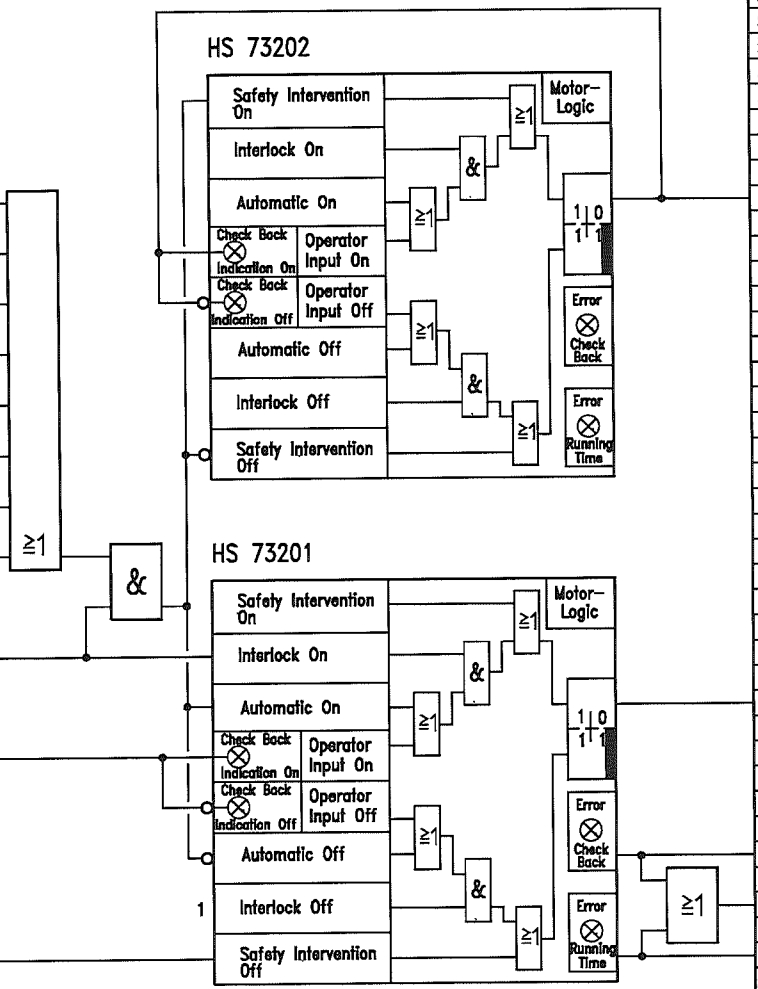

Path	Type	Signal/TAG-No.	Destination	Comment
60	1	HS 73202	Signal to MCC	Frequency converter fan on
80	1	HS 73201	Signal to MCC	Frequency converter LIN-pump P73201 on
86	1	HS 73201_CB	Alarm OS	"Check back error"
88	1	HS 73201_fall	to page no.126/23	LIN-pump fall
90	1	HS 73201_RT	Alarm OS	"Running time error"

JOB NO.	FILE NO	REV.	DATE	REVISIONS	BY	CHKD.

PROJECT NAME: ASU KOSICE

PLANT PART: TANK FARM

AIR LIQUIDE

Air Liquide AGS GmbH
Fütingsweg 34
47805 Krefeld

DRAWING NAME:
TANK STORAGE LIN PUMP P73201
FREQUENZY CONVERTER HS 73201
FREQ. CONVERTER FAN HS 73202

SIZE: A3

FUNKTION DIAGRAM

DRWG. NO.:

PROJ. NO.: K70101

REPLACES: REPLACED BY: BASED:

DATE: 26.11.2004
AUTHOR: Frohn
CHECK: Eichler
STD.:

Comment	Origin	Type	Signal-/TAG-No.	Path
Low speed	Constant	E	1000 rpm/min	15
Cool down pump	from page no.128/85	1	Step11_H73201_N1	21
HP pump is cold	from page no.129/86	1	Step12_H73201_N1	23
HP Pump standby	from page no.130/92	1	Step13_H73201_N1	25
Heating up vaporizer	from page no.131/86	1	Step14_H73201_N1	27
Pressuriziation pump	from page no.132/86	1	Step15_H73201_N2	29
Open liquid valves	from page no.133/80	1	Step16_H73201_N2	31
GAN in operation	from page no.134/80	1	Step17_H72201_N2	33
Depressuriziation	from page no.135/86	1	Step18_H73201_N1	35

Function

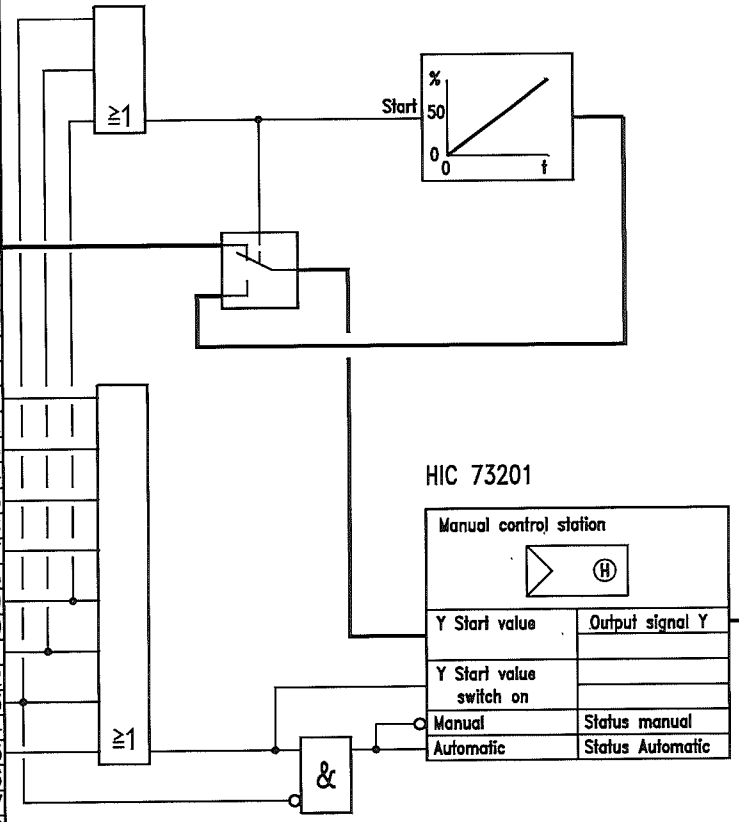

Path	Type	Signal/TAG-No.	Destination	Comment
80	1	SC 73201	Frequency converter	Speed HP LIN pump
81			0-100% = 4-20mA	

JOB NO.	FILE NO	REV.	DATE	REVISIONS	BY	CHKD.

PROJECT NAME: ASU KOSICE

PLANT PART: TANK FARM

AIR LIQUIDE

Air Liquide AGS GmbH
Fütingsweg 34
47805 Krefeld

DRAWING NAME: TANK STORAGE LIN PUMP P73201
SPEED FREQUENCY CONVERTER
HIC 73201

SIZE: A3

FUNKTION DIAGRAM

DRWG. NO.:

PROJ. NO.: K70101

REPLACES: REPLACED BY: BASED:

DATE: 26.11.2004
AUTHOR: Frohn
CHECK: Eichler
STD.:

Comment	Origin	Type	Signal-/TAG-No.	Path
				1
				2
				3
				4
				5
				6
				7
				8
Open liquid valves	from page no.133/84	1	Step16_HS73250	9
				10
GAN in operation	from page no.134/84	1	Step17_HS73250	11
				12
				13
				14
				15
				16
				17
				18
				19
				20
				21
				22
				23
				24
				25
				26
Trip P73201	from page no.126/72	1	US 73201	27
				28
				29
				30
				31
				32
				33
				34
				35
				36
				37
				38
				39
				40
				41
				42
				43
				44
				45
				46
				47
				48

Function

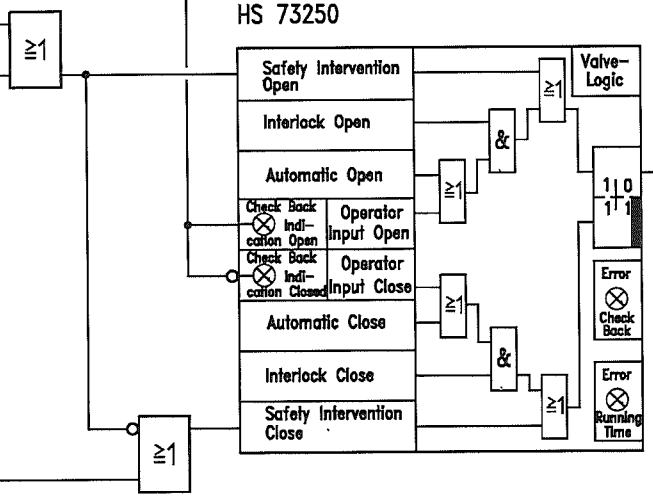

Path	Type	Signal/TAG-No.	Destination	Comment
51				
52				
53	0	HS 73250	to page no. 135/10	
54				
55	0	HS 73250	to page no. 134/10	
56				
57	0	HS 73250	to page no. 133/16	
58				
59	0	HS 73250	to page no. 132/22	
60				
61	0	HS 73250	to page no. 131/22	
62				
63	0	HS 73250	to page no. 130/10	
64				
65	1	HS 73250	to page no. 136/10	
66				
67	1	HV 73250	Solenoid valve	Open liquid valve
68				HV 73250
69				
70				
71				
72				
73				
74				
75				
76				
77				
78				
79				
80				
81				
82				
83				
84				
85				
86				
87				
88				
89				
90				
91				
92				
93				
94				
95				
96				
97				
98				

JOB NO.	FILE NO	REV.	DATE	REVISIONS	BY	CHKD.

PROJECT NAME: ASU KOSICE

PLANT PART: TANK FARM

AIR LIQUIDE

Air Liquide AGS GmbH
Fütingsweg 34
47805 Krefeld

DRAWING NAME:
TANK STORAGE LIN PUMP P73201
LIQUID VALVE HV73250

SIZE A3 — FUNKTION DIAGRAM

DRWG. NO.

PROJ. NO. K70101

REPLACES: REPLACED BY: BASED:

DATE 26.11.2004
AUTHOR Frohn
CHECK Eichler
STD.

Comment	Origin	Type	Signal-/TAG-No.	Path
Discharge W73101	P-transmitter	E	PT 72006	18
GAN in operation	from page no.115/86	1	Step7_PC73158	24
GAN in operation	from page no.136/86	1	Step17_PC73158	26
Water bath nat. gas vaporizer	Fail contact	0	UHH 73100	46

Function

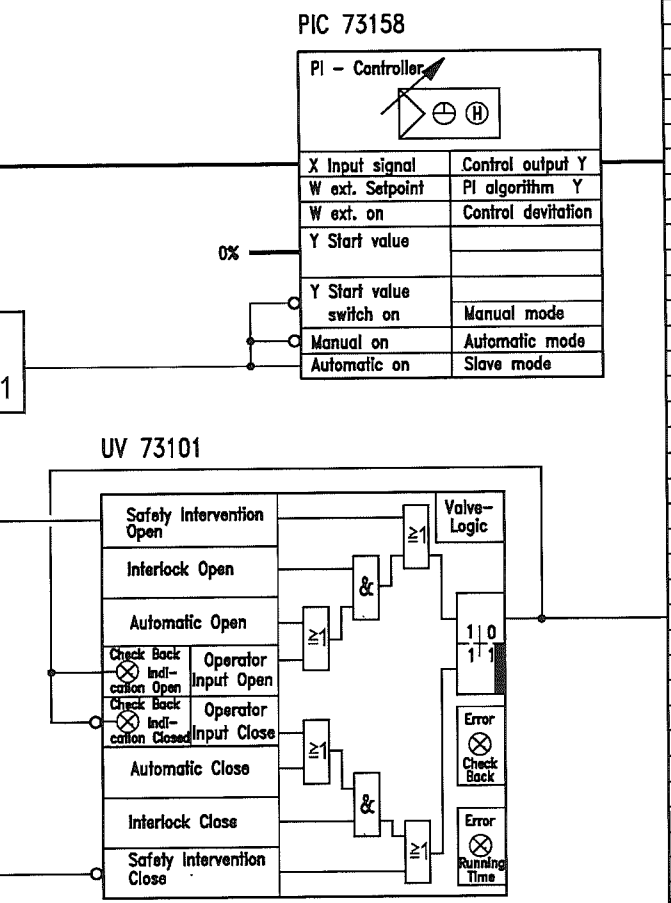

Path	Type	Signal/TAG-No.	Destination	Comment
68	E	PV 73101	Positioner 0-100% = 4-20mA	Control valve PV73158 LIN to W73101
86	1	UV 73101	Solenoid valve	Unlock control valve PV73158

PROJECT NAME	ASU KOSICE	AIR LIQUIDE	DRAWING NAME: TANK STORAGE LIN
PLANT PART	TANK FARM	Air Liquide AGS GmbH Fütingsweg 34 47805 Krefeld	WATER BATH NAT. GAS VAPORIZER DISCHARGE PRESSURE PIC 73158

SIZE	A3	FUNKTION DIAGRAM	DATE 26.11.2004
DRWG. NO.			AUTHOR Frohn
PROJ. NO.	K70101		CHECK Eichler
REPLACES:	REPLACED BY:		STD.
			Page no. 145 OF 160 Pages
			BASED:

JOB NO. | FILE NO | REV. | DATE | REVISIONS | BY | CHKD.

Comment	Origin	Type	Signal-/TAG-No.	Path
				1
				2
				3
				4
				5
				6
				7
				8
				9
				10
				11
				12
				13
				14
				15
				16
				17
				18
				19
				20
				21
				22
				23
				24
				25
				26
				27
				28
				29
				30
				31
				32
				33
				34
				35
				36
				37
				38
				39
				40
				41
				42
				43
				44
				45
				46
				47
				48

Function

Path	Type	Signal/TAG-No.	Destination	Comment
51				
52				
53				
54				
55				
56				
57				
58				
59				
60				
61				
62				
63				
64				
65				
66				
67				
68				
69				
70				
71				
72				
73				
74				
75				
76				
77				
78				
79				
80				
81				
82				
83				
84				
85				
86				
87				
88				
89				
90				
91				
92				
93				
94				
95				
96				
97				
98				

JOB NO.	FILE NO.	REV.	DATE	REVISIONS	BY	CHKD.

PROJECT NAME: ASU KOSICE

PLANT PART: TANK FARM

AIR LIQUIDE

Air Liquide AGS GmbH
Fütingsweg 34
47805 Krefeld

DRAWING NAME: SPARE

SIZE: A3

FUNKTION DIAGRAM

DRWG. NO.:

PROJ. NO.: K70101

REPLACES: REPLACED BY: BASED:

DATE: 26.11.2004
AUTHOR: Frohn
CHECK: Eichler
STD.:

Comment	Origin	Type	Signal-/TAG-No.	Path
Pressure LAr-tank 1	P-transmitter	E	PT 44105	18
B 44101				19

Function

PIC 44105

PI - Controller

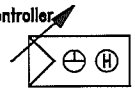

X Input signal	Control output Y
W ext. Setpoint	PI algorithm Y
W ext. on	Control devitation
Y Start value	
Y Start value switch on	
	Manual mode
Manual on	Automatic mode
Automatic on	Slave mode

Path	Type	Signal/TAG-No.	Destination	Comment
68	E	PV 44105	Positioner 0-100%	Control valve PV44105
69			= 4-20mA	Blow out

JOB NO.	FILE NO	REV.	DATE	REVISIONS	BY	CHKD.

PROJECT NAME: ASU KOSICE

PLANT PART: TANK FARM

AIR LIQUIDE

Air Liquide AGS GmbH
Fittingsweg 34
47805 Krefeld

DRAWING NAME:
TANK STORAGE B44101
PRESSURE CONTROL LAR TANK 1
PIC 44105

SIZE A3 | FUNKTION DIAGRAM

DRWG. NO.

PROJ. NO. K70101

REPLACES: | REPLACED BY: | BASED:

DATE 26.11.2004
AUTHOR Frohn
CHECK Eichler
STD.

Comment	Origin	Type	Signal-/TAG-No.	Path
Pressure LAr-tank 2 B 44201	P-transmitter	E	PT 44205	18

Function

PIC 44205

PI - Controller

X Input signal	Control output Y
W ext. Setpoint	PI algorithm Y
W ext. on	Control devitation
Y Start value	
Y Start value switch on	Manual mode
Manual on	Automatic mode
Automatic on	Slave mode

Path	Type	Signal/TAG-No.	Destination	Comment
68	E	PV 44205	Positioner 0-100% = 4-20mA	Control valve PV44205 Blow out

JOB NO.	FILE NO	REV.	DATE	REVISIONS	BY	CHKD.

PROJECT NAME: ASU KOSICE

PLANT PART: TANK FARM

AIR LIQUIDE

Air Liquide AGS GmbH
Fütingsweg 34
47805 Krefeld

DRAWING NAME: TANK STORAGE B44201

PRESSURE CONTROL LAR TANK 2
PIC 44205

SIZE: A3

FUNKTION DIAGRAM

DRWG. NO.:

PROJ. NO.: K70101

REPLACES: REPLACED BY: BASED:

DATE: 26.11.2004
AUTHOR: Frohn
CHECK: Eichler
STD.:

Rang.	Comment	Origin	Type	Signal-/TAG-No.	Path
	Death man's handle	from page no.150/79	1	HS 44011_Out	16
	LAR pump P44001 on	Check back signal	1	EH 44001	22
	Emergency shut down	Contact ESD relay	0	HZ 44001	30

Function

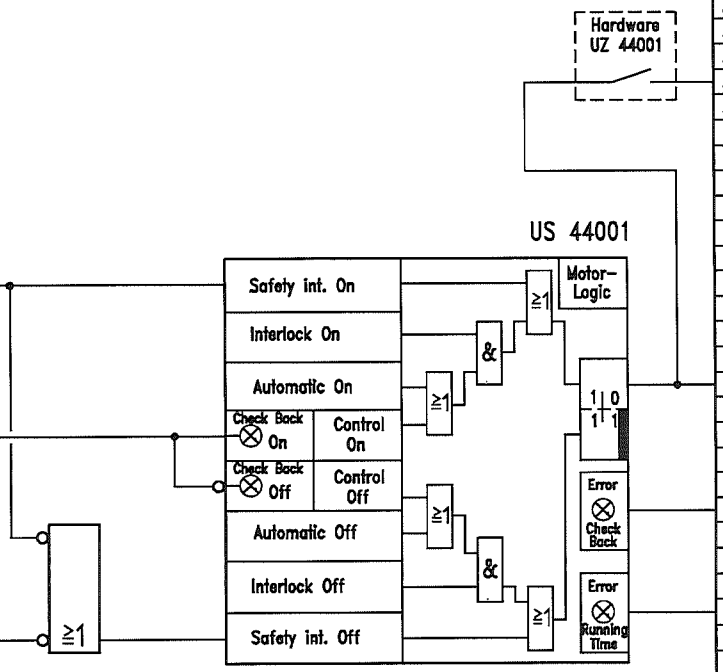

Path	Type	Signal/TAG-No.	Destination	Comment	Rang.
58	1	US 44001	Signal to MCC	LAR pump on	
70	1	US 44001			
75	1	US 44001_CB	Alarm OS	"Check back error"	
79	1	US 44001_RT	Alarm OS	"Running time error"	

JOB NO.	FILE NO	REV.	DATE	REVISIONS	BY	CHKD.

PROJECT NAME: ASU KOSICE

PLANT PART: TANK FARM

AIR LIQUIDE

Air Liquide AGS GmbH
Fütingsweg 34
47805 Krefeld

DRAWING NAME:
TANK STORAGE B44201
LAR PUMP P44001
US 44001

SIZE A3 — FUNKTION DIAGRAM

DATE 26.11.2004
AUTHOR Frohn
CHECK Eichler
STD.

DRWG. NO.

PROJ. NO. K70101

REPLACES: REPLACED BY: BASED:

Comment	Origin	Type	Signal-/TAG-No.	Path
				1
				2
Start filling	Local push button	1	HS 44012	3
				4
				5
				6
				7
Level LAR-tank 2	Value < Min2	1	LLL 44205	8
				9
Enable LAr pump	Software switch OS	1	HS 44010	10
				11
				12
				13
Death man's handle	Contact 1 - 0 - 1	1	HS 44011	14
				15
				16
				17
				18
				19
				20
				21
				22
				23
				24
				25
				26
				27
				28
				29
				30
				31
				32
				33
				34
				35
				36
				37
				38
				39
				40
				41
				42
				43
				44
				45
				46
				47
				48

Function

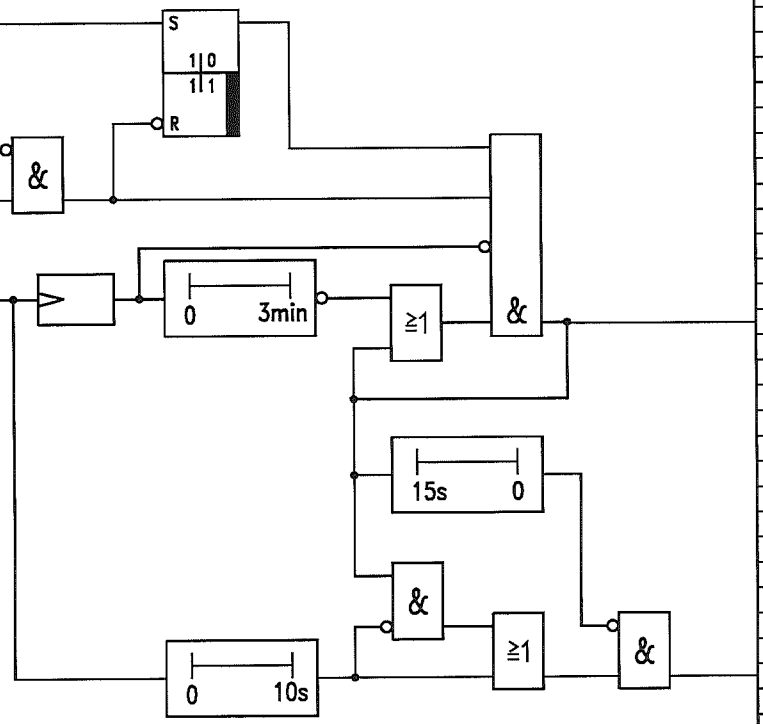

Path	Type	Signal/TAG-No.	Destination	Comment
51				
52				
53				
54				
55				
56				
57				
58				
59				
60				
61				
62				
63				
64				
65	1	UOH 44011	Local flash lamp	"Push dead man's handle!"
66				
67				
68				
69				
70				
71				
72				
73				
74				
75				
76				
77				
78				
79	1	HS 44011_Out	to page no. 149/16	LAr-pump on
80				
81				
82				
83				
84				
85				
86				
87				
88				
89				
90				
91				
92				
93				
94				
95				
96				
97				
98				

JOB NO.	FILE NO.	REV.	DATE	REVISIONS	BY	CHKD.

PROJECT NAME: ASU KOSICE

PLANT PART: TANK FARM

AIR LIQUIDE

Air Liquide AGS GmbH
Fittingsweg 34
47805 Krefeld

DRAWING NAME:
TANK STORAGE P44001
DEAD MAN'S HANDLE HS 44011

SIZE: A3

FUNKTION DIAGRAM

DRWG. NO.:

PROJ. NO.: K70101

REPLACES: REPLACED BY: BASED:

DATE: 26.11.2004
AUTHOR: Frohn
CHECK: Eichler
STD.:

Rang.	Comment	Origin	Type	Signal-/TAG-No.	Path
					1
					2
					3
					4
					5
					6
					7
					8
					9
	Reset trip LAR-pump P48001	Software reset button	1	HS 48001_RES	10
					11
					12
					13
	Fail pump	from page no.15x/88	1	HS 48001_fail	14
					15
	End pressure P48001	Value > Max2	1	PHH 48050	16
					17
					18
					19
	Pressure B48001	Value > Max2	1	PHH 48005	20
					21
	Pressure B48001	Contact > Max	0	PH 48004	22
					23
	Level B48001	Value > Max2	1	LHH 48020	24
					25
	B48001 overflow	Value < Min	1	TL 48004	26
					27
	Emergency shut down	Contact ESD relay	0	HZ 48001	28
					29
					30
					31
					32
					33
					34
					35
					36
					37
					38
					39
					40
					41
					42
					43
					44
					45
					46
					47
					48

Function

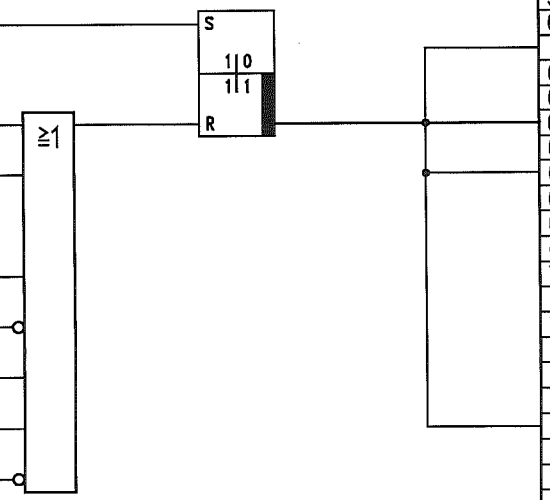

Path	Type	Signal/TAG-No.	Destination	Comment	Rang.
51					
52					
53					
54					
55					
56					
57					
58					
59					
60					
61	1	UA 48000	Alarm OS	"Trip LAR-pump P48001"	
62					
63					
64	1	US 48000	to page no. 154/40	Trip LAR-pump P48001	
65					
66	1	US 48000	to page no. 152/7	Start conditions	
67					
68					
69					
70					
71					
72					
73					
74					
75					
76	1	US 48000	to page no. 155/21	HS48050 off	
77					
78					
79					
80					
81					
82					
83					
84					
85					
86					
87					
88					
89					
90					
91					
92					
93					
94					
95					
96					
97					
98					

JOB NO.	FILE NO	REV.	DATE	REVISIONS	BY	CHKD.

PROJECT NAME: ASU KOSICE

PLANT PART: TANK FARM

AIR LIQUIDE

Air Liquide AGS GmbH
Fütingsweg 34
47805 Krefeld

DRAWING NAME:
TANK STORAGE P48001
LAR BACK UP PUMP
TRIP US 48000

SIZE: A3

FUNKTION DIAGRAM

DRWG. NO.:

PROJ. NO.: K70101

REPLACES: REPLACED BY:

DATE: 26.11.2004
AUTHOR: Frohn
CHECK: Eichler
STD.:

BASED:

Comment	Origin	Type	Signal-/TAG-No.	Path
				1
				2
				3
				4
Start cool down pump	Software switch	1	HS 48001	5
				6
Trip LAR-pump	from page no.151/66	1	US 48000	7
				8
				9
				10
				11
				12
				13
				14
				15
				16
				17
				18
HV 48010 closed	from page no.155/69	0	US 48010	19
				20
HV 48070 open	Y > 99%	1	H48070_100	21
				22
				23
				24
				25
				26
				27
				28
				29
				30
				31
				32
				33
				34
				35
				36
				37
				38
				39
				40
				41
				42
				43
				44
				45
Start pump	Software push button	1	HS 48001_S	46
				47
				48

Function

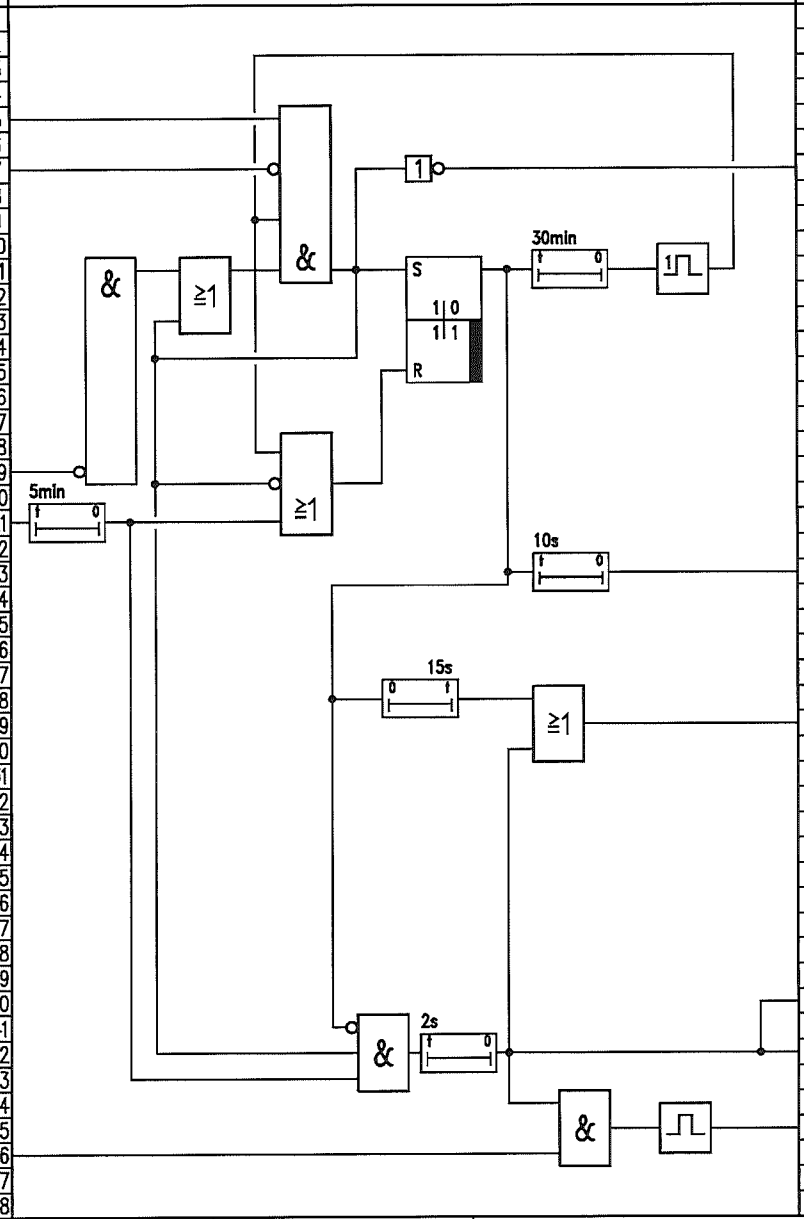

Path	Type	Signal/TAG-No.	Destination	Comment
51				
52				
53				
54				
55				
56				
57	1	UL 48001	to page no. 154/36	LAR-pump off from seq.
58				
59				
60				
61				
62				
63				
64				
65				
66				
67				
68				
69				
70				
71				
72				
73	1	HIC 48070	to page no. 153/14	Cool down valve
74				HV 48070
75				
76				
77				
78				
79	1	UH 48010	to page no. 155/27	Open HV 48010
80				
81				
82				
83				
84				
85				
86				
87				
88				
89				
90	1	UOH 48003	Monitoring OS	"LAR-Pump ready to
91				start"
92	1	UH 48003	to page no. 154/28	Ready to start
93				
94				
95	1	UH 48001	to page no. 154/30	LAR-pump on from
96				sequence
97				
98				

JOB NO.	FILE NO	REV.	DATE	REVISIONS	BY	CHKD.

PROJECT NAME: ASU KOSICE

PLANT PART: TANK FARM

AIR LIQUIDE

Air Liquide AGS GmbH
Fütingsweg 34
47805 Krefeld

DRAWING NAME:
LAR STORAGE P48001
LAR BACK UP PUMP
START SEQUENCE US48001

SIZE A3 — FUNKTION DIAGRAM

DRWG. NO.

PROJ. NO. K70101

REPLACES: REPLACED BY: BASED:

DATE 26.11.2004
AUTHOR Frohn
CHECK Eichler
STD.

Comment	Origin	Type	Signal-/TAG-No.	Path
Start sequence	from page no.152/73	1	US 48001	14

Function

HIC 48070

Manual control station

Y Start value	Output signal Y
Y Start value switch on	
Manual	Status manual
Automatic	Status Automatic

100%

Path	Type	Signal/TAG-No.	Destination	Comment
61	E	HV 48070	Positioner 0-100% = 4...20mA	Control valve HV48070

JOB NO.	FILE NO.	REV.	DATE	REVISIONS	BY	CHKD.

PROJECT NAME: ASU KOSICE

PLANT PART: TANK FARM

AIR LIQUIDE

Air Liquide AGS GmbH
Fütingsweg 34
47805 Krefeld

DRAWING NAME:
LAR STORAGE P48001
LAR BACK UP PUMP
COOL DOWN VALVE HV48070

SIZE: A3

FUNKTION DIAGRAM

DRWG. NO.

PROJ. NO.: K70101

REPLACES: REPLACED BY: BASED:

DATE: 26.11.2004
AUTHOR: Frohn
CHECK: Eichler
STD.

Comment	Origin	Type	Signal-/TAG-No.	Path
Ready to start	from page no.152/92	1	US 48003	28
Pump on from seq.	from page no.152/95	1	UH 48001	30
LOX-pump on	Check back signal	1	EH 48001	32
Pump off from seq.	From page no.152/57	1	UL 48001	36
Trip LAR-Pump	from page no.151/64	1	US 48000	40

Function

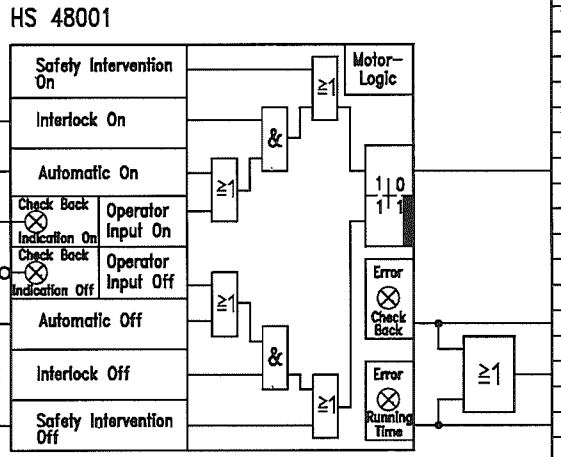

Path	Type	Signal/TAG-No.	Destination	Comment
80	1	HS 63001	Signal to MCC	LAR-pump P48001 on
86	1	HS 48001_CB	Alarm OS	"Check back error"
88	1	HS 48001_fail	to page no. 151/14	LAR-pump fail
90	1	HS 48001_RT	Alarm OS	"Running time error"

JOB NO.	FILE NO	REV.	DATE	REVISIONS	BY	CHKD.

PROJECT NAME: ASU KOSICE

PLANT PART: TANK FARM

AIR LIQUIDE

Air Liquide AGS GmbH
Fütingsweg 34
47805 Krefeld

DRAWING NAME:
LAR STORAGE P48001
LAR BACK UP PUMP
HS 48001

SIZE: A3

FUNKTION DIAGRAM

DRWG. NO.:

PROJ. NO.: K70101

REPLACES: REPLACED BY: BASED:

DATE: 26.11.2004
AUTHOR: Frohn
CHECK: Eichler
STD.:

Comment	Origin	Type	Signal-/TAG-No.	Path
Open from sequence	from page no.152/79	1	UH 48010	27
Trip LAR-pump	from page no.151/76	1	US 48000	39
LAR-pump off	Check back signal	0	EH 48001	41

Function

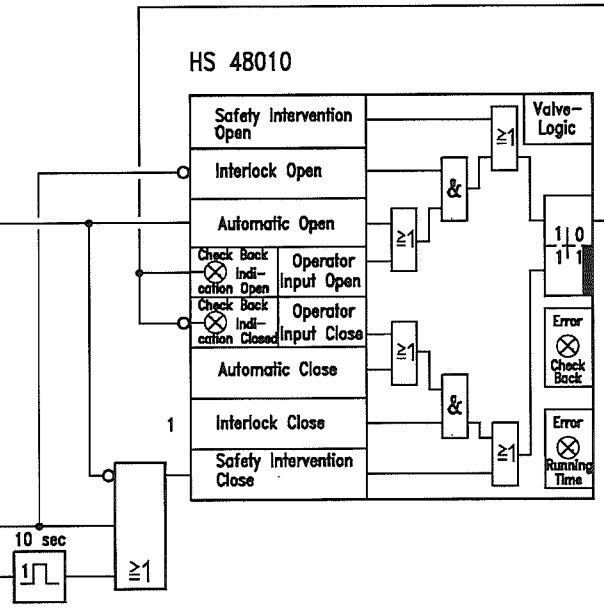

Path	Type	Signal/TAG-No.	Destination	Comment
69	0	US 48010	to page no.152/19	Start conditions
77	1	US 48010	Solenoid valve	Open valve HV48010
78				LAR from Tanks

JOB NO.	FILE NO.	REV.	DATE	REVISIONS	BY	CHKD.

PROJECT NAME: ASU KOSICE

PLANT PART: TANK FARM

AIR LIQUIDE

Air Liquide AGS GmbH
Fütingsweg 34
47805 Krefeld

DRAWING NAME:
LAR BACK UP PUMP P48001
LAR FROM B44101 / B44201
HS 48010

SIZE: A3 — FUNKTION DIAGRAM

DRWG. NO.

PROJ. NO.: K70101

REPLACES: REPLACED BY: BASED:

DATE: 26.11.2004
AUTHOR: Frohn
CHECK: Eichler
STD.

Rang.	Comment	Origin	Type	Signal-/TAG-No.	Path
					1
					2
					3
					4
					5
					6
					7
					8
					9
					10
					11
					12
					13
					14
					15
					16
					17
					18
					19
					20
	Trip P48001	from page no.151/76	1	US 48000	21
					22
					23
					24
					25
					26
					27
					28
					29
					30
					31
					32
					33
					34
					35
					36
					37
					38
					39
					40
					41
					42
					43
					44
					45
					46
					47
					48

Function

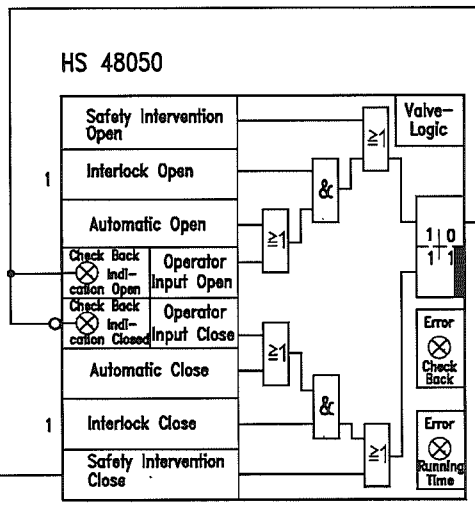

Path	Type	Signal/TAG-No.	Destination	Comment	Rang.
51					
52					
53					
54					
55					
56					
57					
58					
59					
60					
61	1	HS 48050	Solenoid valve	Open valve HV48050	
62					
63					
64					
65					
66					
67					
68					
69					
70					
71					
72					
73					
74					
75					
76					
77					
78					
79					
80					
81					
82					
83					
84					
85					
86					
87					
88					
89					
90					
91					
92					
93					
94					
95					
96					
97					
98					

JOB NO.	FILE NO.	REV.	DATE	REVISIONS	BY	CHKD.

PROJECT NAME: ASU KOSICE

PLANT PART: TANK FARM

AIR LIQUIDE

Air Liquide AGS GmbH
Fütingsweg 34
47805 Krefeld

DRAWING NAME:
LAR BACK UP PUMP P48001
LAR TO HP LAR TANK B48001
HS 48050

SIZE: A3

FUNKTION DIAGRAM

DRWG. NO.:

PROJ. NO.: K70101

REPLACES: REPLACED BY: BASED:

DATE: 26.11.2004
AUTHOR: Frohn
CHECK: Eichler
STD.:

Comment	Origin	Type	Signal-/TAG-No.	Path	Function	Path	Type	Signal/TAG-No.	Destination	Comment
				1		51				
				2		52				
				3		53				
				4		54				
				5		55				
				6		56				
				7		57				
				8		58				
				9		59				
				10		60				
				11		61				
				12		62				
				13		63				
				14		64				
				15		65				
				16		66				
				17		67				
				18		68				
				19		69				
				20		70				
				21		71				
				22		72				
				23		73				
				24		74				
				25		75				
				26		76				
				27		77				
				28		78				
				29		79				
				30		80				
				31		81				
				32		82				
				33		83				
				34		84				
				35		85				
				36		86				
				37		87				
				38		88				
				39		89				
				40		90				
				41		91				
				42		92				
				43		93				
				44		94				
				45		95				
				46		96				
				47		97				
				48		98				

JOB NO.	FILE NO	REV.	DATE	REVISIONS	BY	CHKD.

PROJECT NAME: ASU KOSICE

PLANT PART: TANK FARM

AIR LIQUIDE

Air Liquide AGS GmbH
Fütingsweg 34
47805 Krefeld

DRAWING NAME: SPARE

SIZE: A3

FUNKTION DIAGRAM

DRWG. NO.:

PROJ. NO.: K70101

REPLACES: REPLACED BY: BASED:

DATE: 26.11.2004
AUTHOR: Frohn
CHECK: Eichler
STD.:

Comment	Origin	Type	Signal-/TAG-No.	Path
Pressure HP-LAR tank B 48001	P-transmitter	E	PT 48005	18

Function

PIC 48005

PI – Controller

X Input signal	Control output Y
W ext. Setpoint	PI algorithm Y
W ext. on	Control devitation
Y Start value	
Y Start value switch on	
	Manual mode
Manual on	Automatic mode
Automatic on	Slave mode

PIC 48027

PI – Controller

X Input signal	Control output Y
W ext. Setpoint	PI algorithm Y
W ext. on	Control devitation
Y Start value	
Y Start value switch on	
	Manual mode
Manual on	Automatic mode
Automatic on	Slave mode

Path	Type	Signal/TAG-No.	Destination	Comment
68	E	PV 48005	Positioner 0-100% = 4-20mA	Control valve PV48005 Blow out
85	E	PV 48027	Positioner 0-100% = 4-20mA	Control valve PV48027 Depressurisation

JOB NO.	FILE NO	REV.	DATE	REVISIONS	BY	CHKD.

PROJECT NAME: ASU KOSICE

PLANT PART: TANK FARM

AIR LIQUIDE

Air Liquide AGS GmbH
Fütingsweg 34
47805 Krefeld

DRAWING NAME:
TANK STORAGE B48001
PRESSURE CONTROL HP LAR TANK
PIC 48005 / 48027

SIZE: A3

FUNKTION DIAGRAM

DRWG. NO.:

PROJ. NO.: K70101

REPLACES: REPLACED BY: BASED:

DATE: 26.11.2004
AUTHOR: Frohn
CHECK: Eichler
STD.:

Comment	Origin	Type	Signal-/TAG-No.	Path
GAR beh. vaporizer	P-transmitter	E	PT 49020	10
GAR temp. trip	from page no.105/74	1	UZ 49020	17
Level B48001	Value < Min2	1	LSLL 48020	19
Pressure B48001	Value < Min2	1	PSLL 48005	21
GAR beh. vaporizer	Pt100	E	TE 49020	34

Function

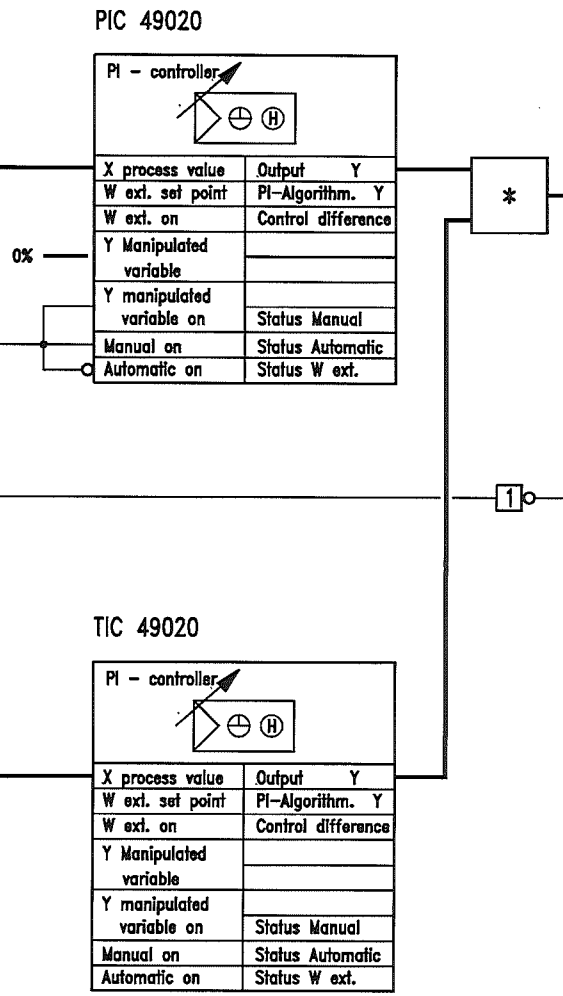

Path	Type	Signal/TAG-No.	Destination	Comment
61	E	PV49020	Positioner 0-100%	GAR control valve
62			= 4-20mA	PV 49020
73	0	UV 49020	Solenoid valve	Lock control valve
74				PV 49020

JOB NO.	FILE NO.	REV.	DATE	REVISIONS	BY	CHKD.

PROJECT NAME: ASU KOSICE

PLANT PART: TANK FARM

AIR LIQUIDE

Air Liquide AGS GmbH
Fütingsweg 34
47805 Krefeld

DRAWING NAME:
HP LAR TANK B48001
GAR TEMPERATURE TRIP UZ49020
GAR CONTROL PIC49020/TIC49020

SIZE: A3

FUNKTION DIAGRAM

DRWG. NO.:

PROJ. NO.: K70101

REPLACES: REPLACED BY: BASED:

DATE: 26.11.2004
AUTHOR: Frohn
CHECK: Eichler
STD.:

Comment	Origin	Type	Signal-/TAG-No.	Path
				1
				2
				3
				4
				5
				6
				7
				8
				9
				10
				11
				12
				13
				14
				15
				16
				17
				18
				19
				20
				21
				22
				23
				24
				25
				26
				27
				28
				29
				30
				31
				32
				33
				34
				35
				36
				37
				38
				39
				40
				41
				42
				43
				44
				45
				46
				47
				48

Function

Path	Type	Signal/TAG-No.	Destination	Comment
51				
52				
53				
54				
55				
56				
57				
58				
59				
60				
61				
62				
63				
64				
65				
66				
67				
68				
69				
70				
71				
72				
73				
74				
75				
76				
77				
78				
79				
80				
81				
82				
83				
84				
85				
86				
87				
88				
89				
90				
91				
92				
93				
94				
95				
96				
97				
98				

JOB NO.	FILE NO	REV	DATE	REVISIONS	BY	CHKD.

PROJECT NAME: ASU KOSICE

PLANT PART: TANK FARM

AIR LIQUIDE

Air Liquide AGS GmbH
Fütingsweg 34
47805 Krefeld

DRAWING NAME: SPARE

SIZE: A3

FUNKTION DIAGRAM

DRWG. NO.:

PROJ. NO.: K70101

REPLACES: REPLACED BY:

DATE: 26.11.2004
AUTHOR: Frohn
CHECK: Eichler
STD.:

BASED: